POWERTIP TECH. CORP.

SPECIFICATIONS

CUSTOMER	:	CDE012
SAMPLE CODE	:	SH800480T013-IHC28
MASS PRODUCTION CODE	:	PH800480T013-IHC28
PCAP FIRMWARE VERSION	:	GPG1477A_PL0289_800X480__L19F70V03_COF_170403.bin
SAMPLE VERSION	:	01
SPECIFICATIONS EDITION	:	003
DRAWING NO. (Ver.)	:	LMD-PH800480T013-IHC28 (Ver.002)
PACKAGING NO. (Ver.)	:	PKG-PH800480T013-IHC28 (Ver.001)

Customer Approved

Date:

Approved	Checked	Designer
黃秋源 Oliver Huang	石建莊 Stone Shin	黃俊清 Ackey Huang

☐ Preliminary specification for design input

■ Specification for sample approval

POWERTIP
2020.05.12
TW RD APR

POWERTIP TECH. CORP.

Headquarters:

No.8, 6th Road, Taichung Industrial Park,
Taichung, Taiwan
台中市 407 工業區六路 8 號

TEL: 886-4-2355-8168
FAX: 886-4-2355-8166

E-mail: sales@powertip.com.tw
Http://www.powertip.com.tw

History of Version

Date (mm / dd / yyyy)	Ver.	Edi.	Description	Page	Design by
08/15/2019	01	001	New Drawing & Sample..	-	Ackey
04/08/2020	01	002	Add Description.	1,11	Ackey
05/12/2020	01	003	Update Description.	1,11	Ackey

Contents

1. SPECIFICATIONS
- 1.1 Features
- 1.2 Mechanical Specifications
- 1.3 Absolute Maximum Ratings
- 1.4 DC Electrical Characteristics
- 1.5 Optical Characteristics
- 1.6 Backlight Characteristics
- 1.7 Touch Panel Characteristics
- 1.8 HYCON I^2C Sensitivity command

2. MODULE STRUCTURE
- 2.1 Counter Drawing
- 2.2 Interface Pin Description
- 2.3 Timing Characteristics

3. QUALITY ASSURANCE SYSTEM
- 3.1 Quality Assurance Flow Chart
- 3.2 Inspection Specification

4. RELIABILITY TEST
- 4.1 Reliability Test Condition

5. PRECAUTION RELATING PRODUCT HANDLING
- 5.1 Safety
- 5.2 Handling
- 5.3 Storage
- 5.4 Terms of Warranty

Appendix : LCM Drawing.
LCM Packaging Specifications.

1. SPECIFICATIONS

1.1 Features

Item	Standard Value
Display Resolution	800 *3 (RGB) * 480 Dots
LCD Type	a-Si TFT , Normally white , Transmissive type
Screen size(inch)	7.0 inch
Viewing Direction	6 O'clock
Surface treatment	Anti-Glare
Color configuration	R.G.B. Vertical Stripe
Backlight Type	White LED B/L
Weight	174 g
Interface	24 Bits RGB Interface
ROHS	THIS PRODUCT CONFORMS THE ROHS OF PTC Detail information please refer website : http://www.powertip.com.tw/news_detail.php?Key=1&cID=1

1.2 Mechanical Specifications

Item	Standard Value	Unit
Outline Dimension	164.9 (W) * 100.0 (L) * 5.29 (H)	mm

LCD panel

Item	Standard Value	Unit
Viewing Area	155.08 (W) * 86.92 (L)	mm
Active Area	154.08 (W) * 85.92 (L)	mm

Note : For detailed information please refer to LCM drawing.

1.3 Absolute Maximum Ratings

Module

Item	Symbol	Condition	Min.	Max.	Unit
Power Supply for TFT Panel	VDD	GND=0V	-0.3	+5.0	V
Power Supply for Backlight Unit	VCC	GND=0V	-0.3	+20.0	V
Operating Temperature	T_{OP}	-	-20	+70	°C
Storage Temperature	T_{ST}	-	-30	+80	°C

The absolute maximum rating values of this product are not allowed to be exceeded at any times. Should a module be used with any of the absolute maximum ratings exceeded, the characteristics of the module may not be recovered, or in an extreme case, the module may be permanently destroyed.

1.4 DC Electrical Characteristics

Module GND = 0V, Ta = 25°C

Item	Symbol	Condition	Min.	Typ.	Max.	Unit
Power Supply for TFT Panel	VDD	GND=0V	3.0	3.3	3.6	V
Power Supply for Backlight Unit	VCC	GND=0V	5	12	15	V
Input Voltage for TFT Panel	V_{IH}	GND=0V	0.7VDD	-	VDD	V
	V_{IL}	GND=0V	0	-	0.3VDD	V
Supply Current for TFT Panel	IDD	IDD@VDD=3.3V	-	110	160	mA
Supply Current for Backlight Unit	ICC	ICC@VCC=5V	-	650	780	mA
Supply Current for Backlight Unit	ICC	ICC@VCC=12V	-	240	360	mA
Input Voltage for PWM Signal	VPH	GND=0V	1.2	-	-	V
	VPL	GND=0V	-	-	0.4	V
Dimming Clock Rate	fP	GND=0V	5	-	100	KHz

1.5 Optical Characteristics

TFT LCD Module VDD = 3.3 V, Ta=25°C

Item		Symbol	Condition	Min.	Typ.	Max.	unit	
Response time	Rise	Tr	Ta = 25°C θX, θY = 0°	-	10	20	ms	Note 2
	Fall	Tf		-	15	30		
Viewing angle	Top	θY+	CR ≥ 10	40	50	-	Deg.	Note 4
	Bottom	θY-		60	70	-		
	Left	θX-		60	70	-		
	Right	θX+		60	70	-		
Contrast ratio		CR	Ta = 25°C θX , θY = 0°	400	500	-	-	Note 3
Color of CIE Coordinate (With B/L)	White	X		0.23	0.28	0.33	-	Note1
		Y		0.27	0.32	0.37		
	Red	X		0.52	0.57	0.62		
		Y		0.31	0.36	0.41		
	Green	X		0.29	0.34	0.39		
		Y		0.55	0.60	0.65		
	Blue	X		0.09	0.14	0.19		
		Y		0.02	0.07	0.12		
Average Brightness Pattern=white display (With LCD) *1		IV	VCC=12.0V PWM="High" (Duty=100%)	680	850	-	cd/m^2	Note1
Uniformity (With LCD) *2		△B	VCC=12.0V PWM="High" (Duty=100%)	70	-	-	%	Note1

Note 1:

*1：△B=B(min) / B(max) * 100%

*2：Measurement Condition for Optical Characteristics:

a：Environment: 25℃±5℃ / 60±20%R.H，no wind，dark room below 10 Lux at typical lamp current and typical operating frequency.

B：Measurement Distance: 500 ± 50 ㎜ ，(θ= 0°)

c：Equipment: TOPCON BM-7 fast，(field 1°)，after 10 minutes operation.

D：The uncertainty of the C.I.E coordinate measurement ±0.01，Average Brightness ± 4%

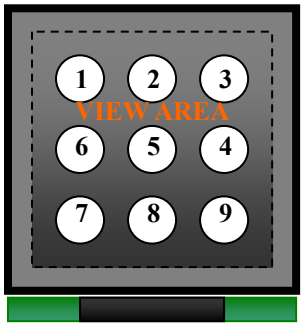

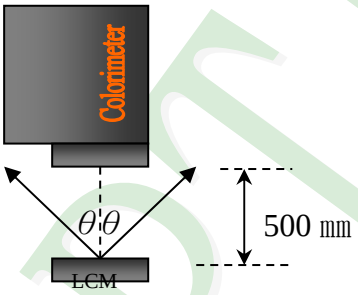

Colorimeter=BM-7 fast

To be measured at the center area of panel with a viewing cone of 1° by Topcon luminance meter BM-7, after 10 minutes operation (module)

Note2: Definition of response time:

The output signals of photo detector are measured when the input signals are changed from “black” to “white”(falling time) and from “white” to “black”(rising time), respectively. The response time is defined as the time interval between the 10% and 90% of Amplitudes.

Refer to figure as below:

Normally White

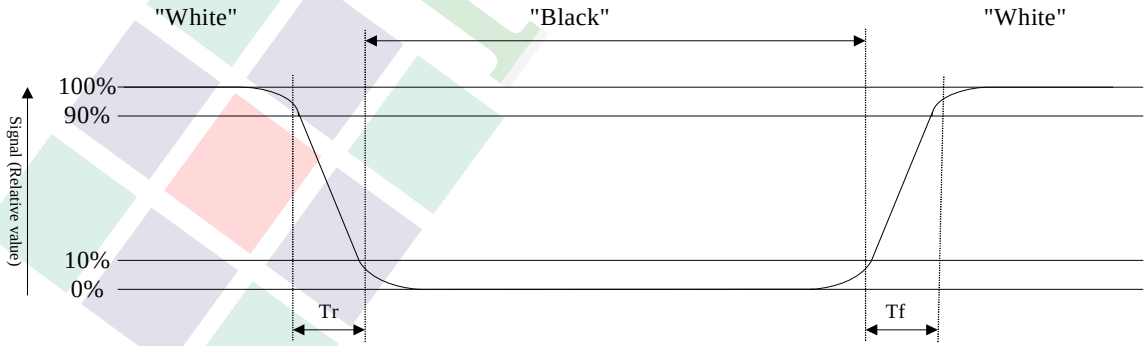

Normally Black

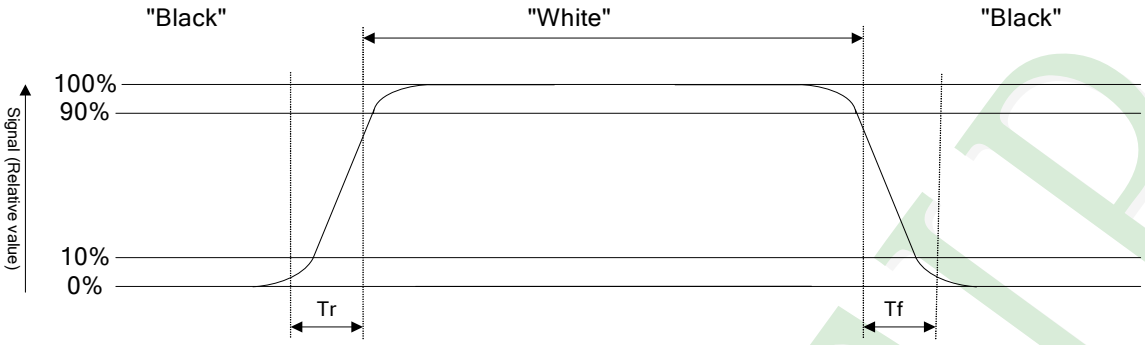

Note3: Definition of contrast ratio:

Contrast ratio is calculated with the following formula

$$\text{Contrast ratio (CR)} = \frac{\text{Photo detector output when LCD is at “White” state}}{\text{Photo detector output when LCD is at “Black” state}}$$

Note4: Definition of viewing angle:

Refer to figure as below:

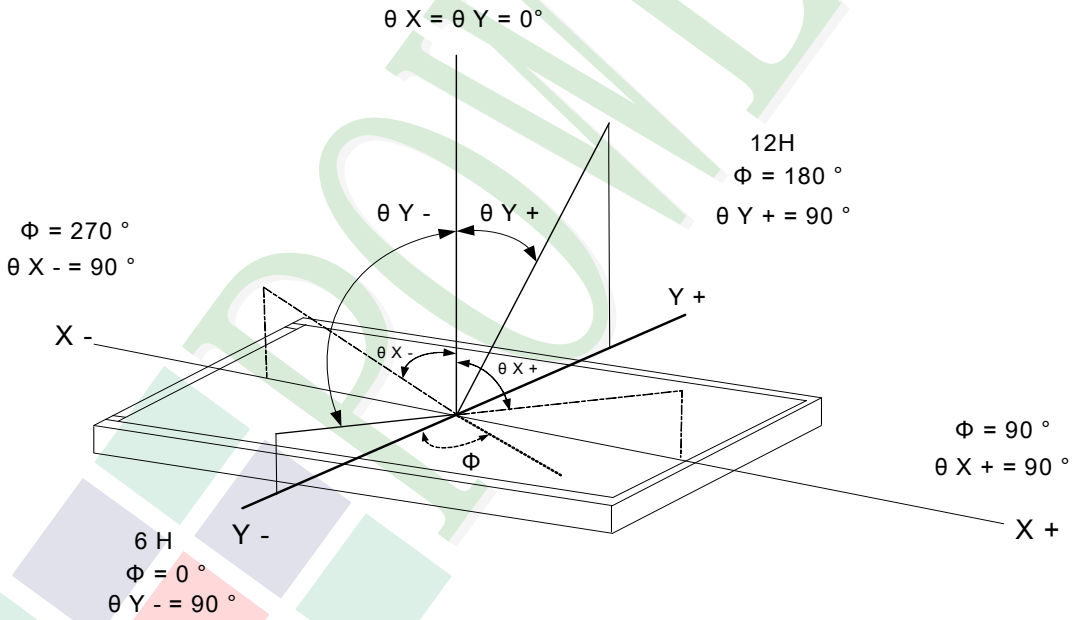

1.6 Backlight Characteristics

Maximum Ratings

Item	Symbol	Min.	Max.	Unit	Remark
LED Forward Current	I_F	35		mA	One LED
LED Reverse Voltage	V_R	10		V	

Electrical / Optical Characteristics

Item	Symbol	Min.	Typ.	Max.	Unit	Remark
LED Voltage	V_L	16.8	18.0	19.2	V	Note1
LED Current	I_L	-	140	-	mA	-
LED life time	-	50000	-	-	H_r	Note2

Note 1: The LED Supply Voltage is defined by the number of LED at Ta=25 °C and I_L =140 mA.

Note 2: The "LED life time" is defined as the module brightness decrease to 50% original brightness at Ta=25 °C and I_L =140 mA. The LED life time could be decreased if operating I_L is larger than 140 mA.

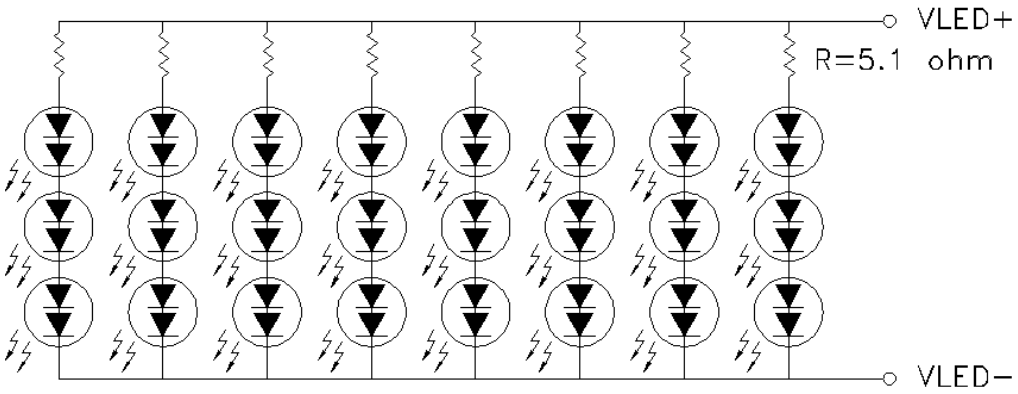

1.7 Touch Panel Characteristics

Features

Item	Standard Value
Touch Panel Size	7”
Touch type	Projective Capacitive Touch Panel
Input Method	Finger / 5 Points touch
Output Interface	I^2C
IC	HY4635
Cover Glass Register Address	0x92
I^2C Address	0x38(7 Bits)

I^2C Address

Bit 7	Bit 6	Bit 5	Bit 4	Bit 3	Bit 2	Bit 1	Bit 0
0	1	1	1	0	0	0	R/W

Bit 0: 0 for Write / 1 for Read

Mechanical Specifications

Item	Standard Value	Unit
Viewing Area	154.88 (W) * 86.72 (L)	mm
Number of sensing channel	24 * 14	

Absolute Maximum Ratings

Item	Symbol	Condition	Min.	Max.	Unit
Supply voltage	TPVDD	-	-0.3	+6.0	V
Operating Temperature	T_{OP}	-	-20	+70	°C
Storage Temperature	T_{ST}	-	-30	+80	°C

DC Electrical Characteristics

Item	Symbol	Condition	Min.	Typ.	Max.	Unit
Power Supply Voltage	TPVDD	-	2.8	3.3	3.6	V
Input High Voltage	VIH	-	0.85 * TPVDD	-	-	V
Input Low Voltage	VIL	-	-	-	0.15 * TPVDD	V

Optical Characteristics

Item	Standard Value	Unit
Total light transmittance	85% or more	-
Hardness	≥6H	-

Touch Panel IC Read/Write description & Register Mapping

Reference: HYCON Driver Porting Reference Guide.

PCAP Firmware Information

File: GPG1477A_PL0289_800X480__L19F70V03_COF_170403.bin

SHA-256: CEBAB89C8E5523BD8ABC01DC66CE176E25999F55858E098F5650BBE67EEB6BA8

Remark: None

1.8 HYCON I²C Sensitivity command:

Address	Register description	R/W	Bit7	Bit6	Bit5	Bit4	Bit3	Bit2	Bit1	Bit0
0x92	GAIN	R/W	Sensitivity setting, setting range：0--5							

Application reference:

Register 0x92=02(Default) without cover lens
Register 0x92=03 Air gap 0.15mm with cover glass 1mm
Register 0x92=04 Air gap 0.15mm with cover glass 2mm
Register 0x92=05 Air gap 0.15mm with cover glass 3-5mm

Caution!

At different cover lens thickness can lead to touch Sensitivity changed (e.g. ghost-touches).
Therefore, the touch needs to be thoroughly tested in the target application.
PTC application design suggestion is only for reference, please adjust based on your final design.

2. MODULE STRUCTURE

2.1 Counter Drawing

2.1.1 LCM Mechanical Diagram

* See Appendix

2.1.2 Block Diagram

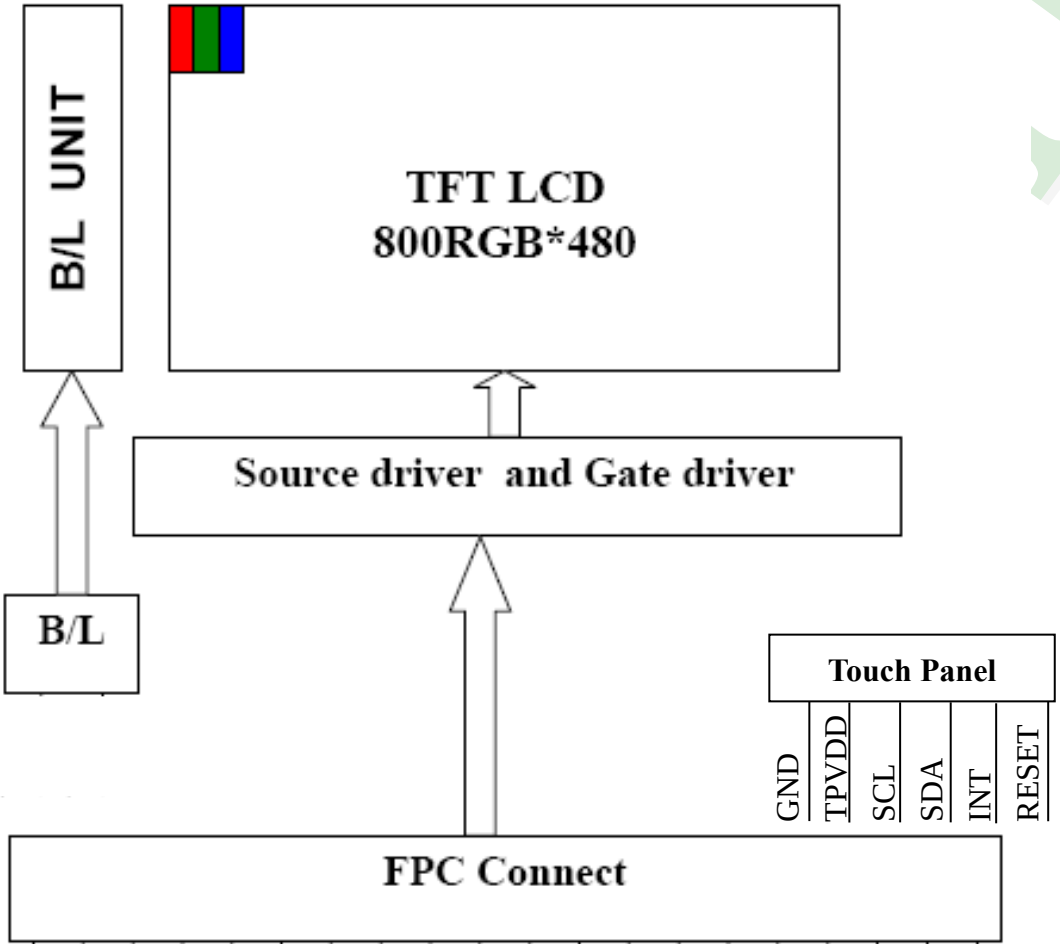

2.2 Interface Pin Description

TFT LCM Interface

Pin#	Name	DESCRIPTION
1	GND	Power Ground.
2	VDD	Power for Digital Circuit.
3	VDD	Power for Digital Circuit.
4	VCC	Power For LED backlight.
5	VCC	Power For LED backlight.
6	PWM	Shutdown & Dimming control input for backlight. Do not allow this pin to float. “Hi” =100%, “Low” = 0%.
7	GND	Power Ground.
8	R0	Red Data.
9	R1	Red Data.
10	R2	Red Data.
11	R3	Red Data.
12	GND	Power Ground.
13	R4	Red Data.
14	R5	Red Data.
15	R6	Red Data.
16	R7	Red Data.
17	GND	Power Ground.
18	G0	Green Data.
19	G1	Green Data.
20	G2	Green Data.
21	G3	Green Data.
22	GND	Power Ground.
23	G4	Green Data.
24	G5	Green Data.
25	G6	Green Data.
26	G7	Green Data.
27	GND	Power Ground.
28	B0	Blue Data.
29	B1	Blue Data.

Pin#	Name	DESCRIPTION
30	B2	Blue Data.
31	B3	Blue Data.
32	GND	Power Ground.
33	B4	Blue Data.
34	B5	Blue Data.
35	B6	Blue Data.
36	B7	Blue Data.
37	GND	Power Ground.
38	HS	Line synchronization signal. Horizontal Sync Input.
39	VS	Frame synchronization signal. Vertical Sync Input.
40	GND	Power Ground.
41	DE	Display enable pin from controller. Data Input Enable.
42	GND	Power Ground.
43	DCLK	Sample clock. Data will be latched at the falling edge of DCLK.
44	GND	Power Ground.
45	CS(NC) / ID1	No Function / ID [4:1] These pins select LCM type. See NOTE1.
46	SDIN(NC) / ID2	No Function / ID [4:1] These pins select LCM type. See NOTE1.
47	SCK(NC) / ID3	No Function / ID [4:1] These pins select LCM type. See NOTE1.
48	DISPLAY CONTROL / ID4	Display Enable (Hi Active) / ID [4:1] These pins select LCM type. See NOTE1.
49	/RESET	Global Reset (Low Active).
50	GND	Power Ground.

Note1

ID Pins Definition:

	PIN 45 ID1	PIN 46 ID2	PIN 47 ID3	PIN 48 ID3
3.5” Module	X	0	0	X
4.3” Module	X	1	0	X
5.0” Module	X	0	1	X
7.0” Module	X	1	1	X

1. Resistor=10k ohm
2. “X”=No use .

Capacitive Touch Panel (CTP) Interface

Pin No.	Symbol	Function
1	GND	Ground.
2	TPVDD	Power.
3	SCL	I^2C Clock.
4	SDA	I^2C Data.
5	INT	The interrupt from the CTP to the Host.
6	RESET	RESET.

2.3.1 Signal AC Characteristics

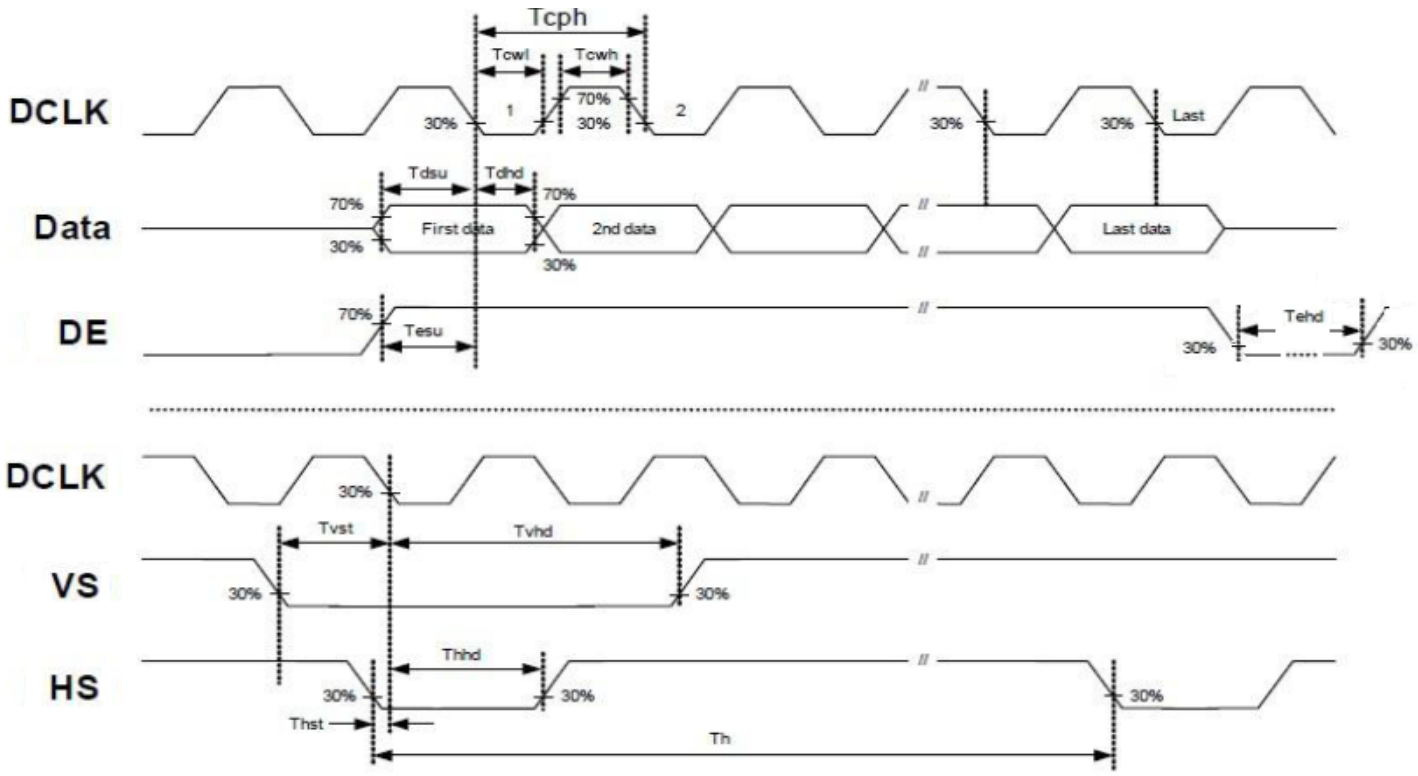

Item	Symbol	Values			Unit	Remark
		Min	Typ	Max		
HS setup time	Thst	8	-	-	ns	
HS hold time	Thhd	8	-	-	ns	
VS setup time	Tvst	8	-	-	ns	
VS hold time	Tvhd	8	-	-	ns	
Data setup time	Tdsu	8	-	-	ns	
Data hole time	Tdhd	8	-	-	ns	
DE setup time	Tesu	8	-	-	ns	
DE hold time	Tehd	8	-	-	ns	
DVDD Power On Slew rate	TPOR	-	-	20	ms	From 0 to 90% DVDD
RESET pulse width	TRst	1	-	-	ms	
DCLK cycle time	Tcph	20	30	-	ns	
Low Level Width	Tcwl	8	-	-	ns	
High Level Width	Tcwh	8	-	-	ns	
DCLK pulse duty	Duty	40	50	60	%	Tcwh / Tcph

2.3.2 Input Timing Setting

Item	Symbol	Values			Unit	Remark
		Min.	Typ.	Max.		
Horizontal Display Area	Thd		800		DCLK	
DCLK Frequency	Fclk	26.4	33.3	46.8	MHz	
One Horizontal Line	Th	862	1056	1200	DCLK	
HS pulse width	Thpw	1		40	DCLK	
HS Blanking	Thb	46	46	46	DCLK	
HS Front Porch	Thfp	16	210	354	DCLK	

Item	Symbol	Values			Unit	Remark
		Min.	Typ.	Max.		
Vertical Display Area	Tvd		480		TH	
VS period time	Tv	510	525	650	TH	
VS pulse width	Tvpw	1		20	TH	
VS Blanking	Tvb	23	23	23	TH	
VS Front Porch	Tvfp	7	22	147	TH	

Horizontal input timing diaqram

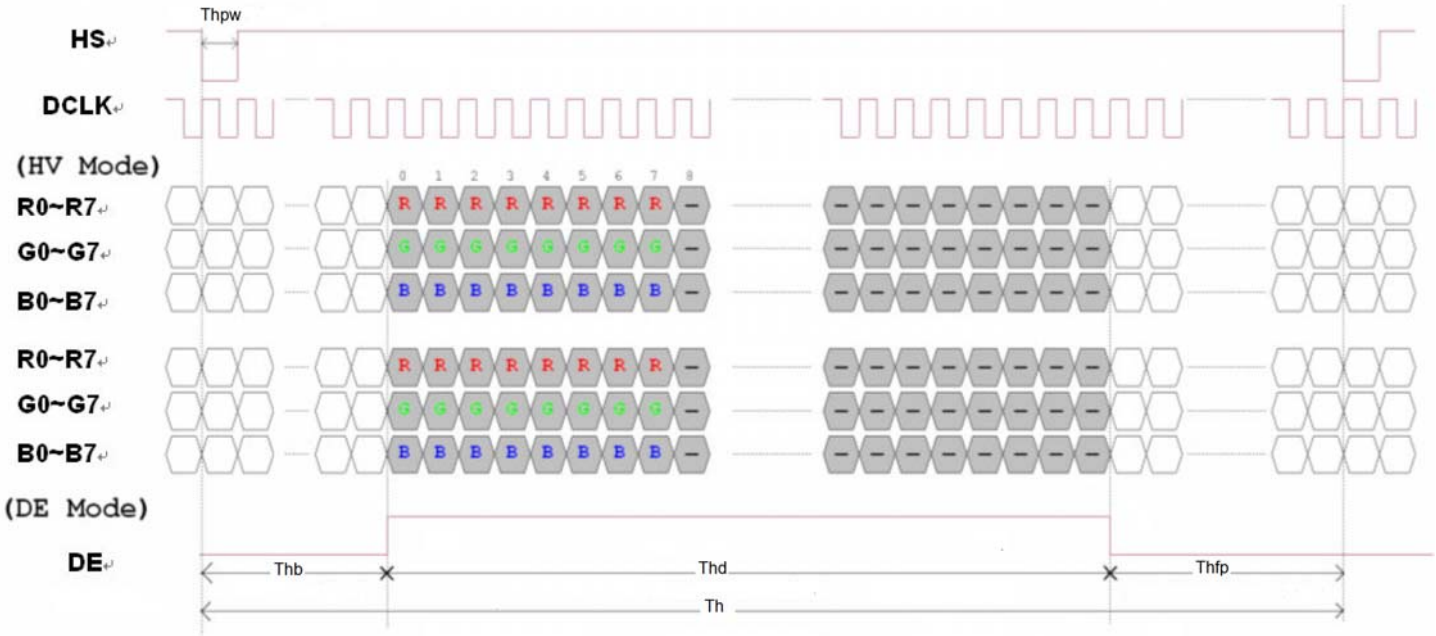

Vertical input timing diaqram

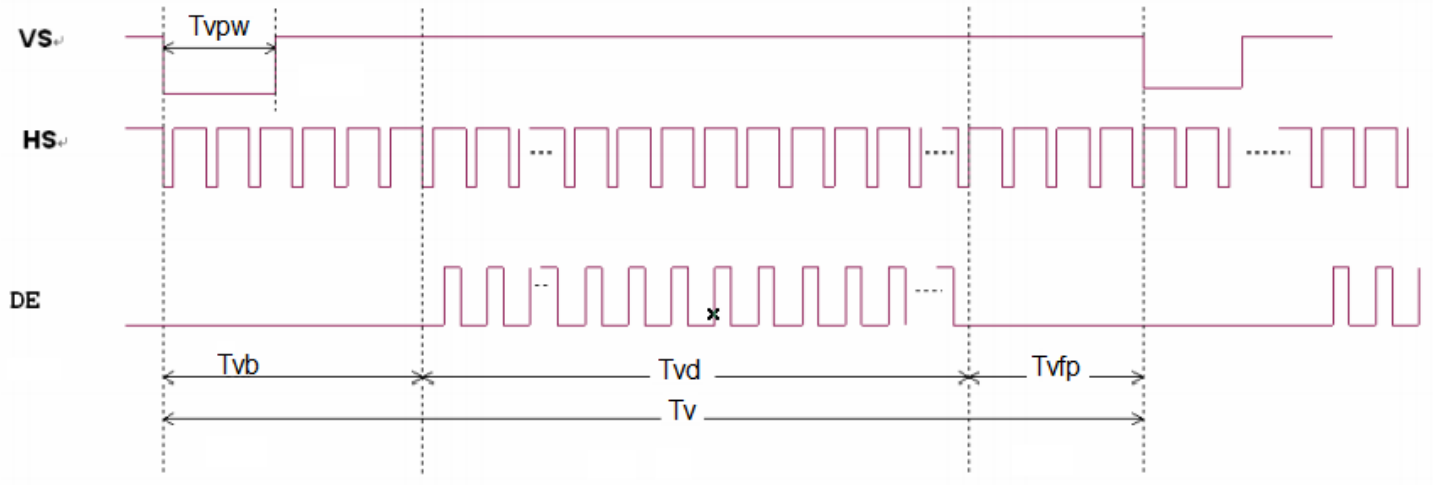

3.3 Power Sequence

POWER ON

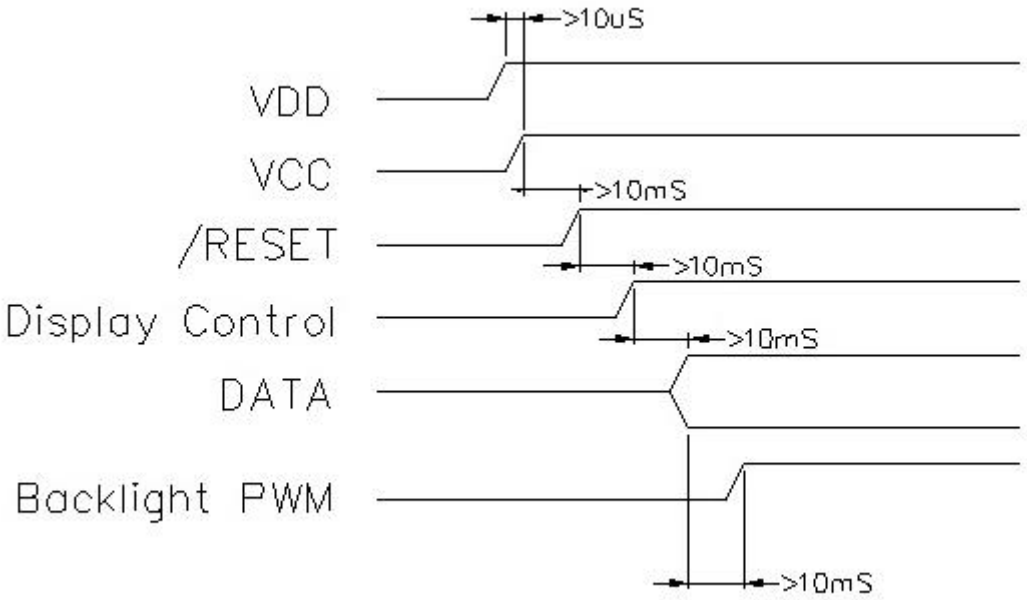

POWER OFF

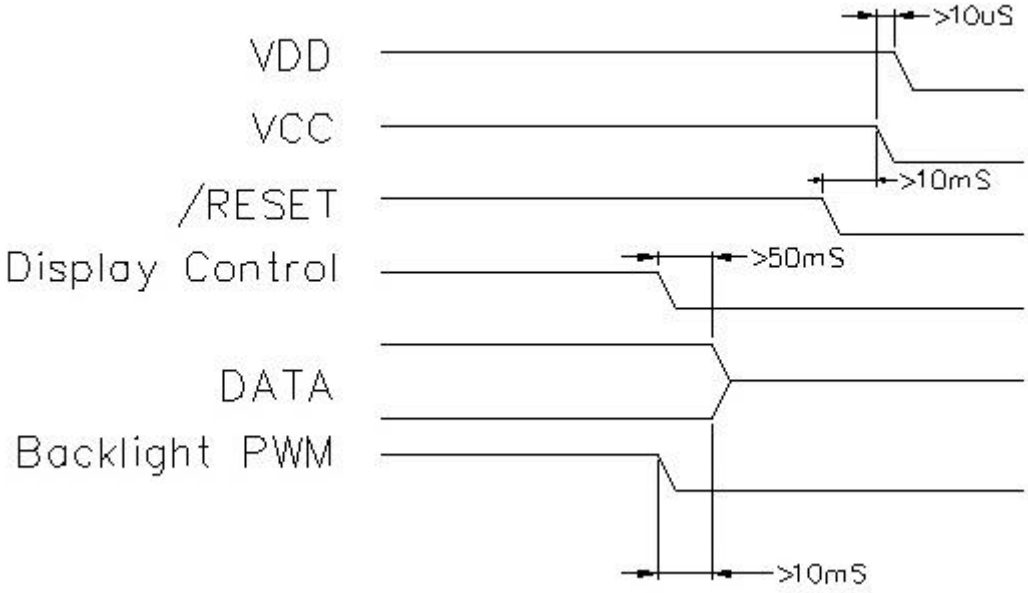

3. QUALITY ASSURANCE SYSTEM

3.1 Quality Assurance Flow Chart

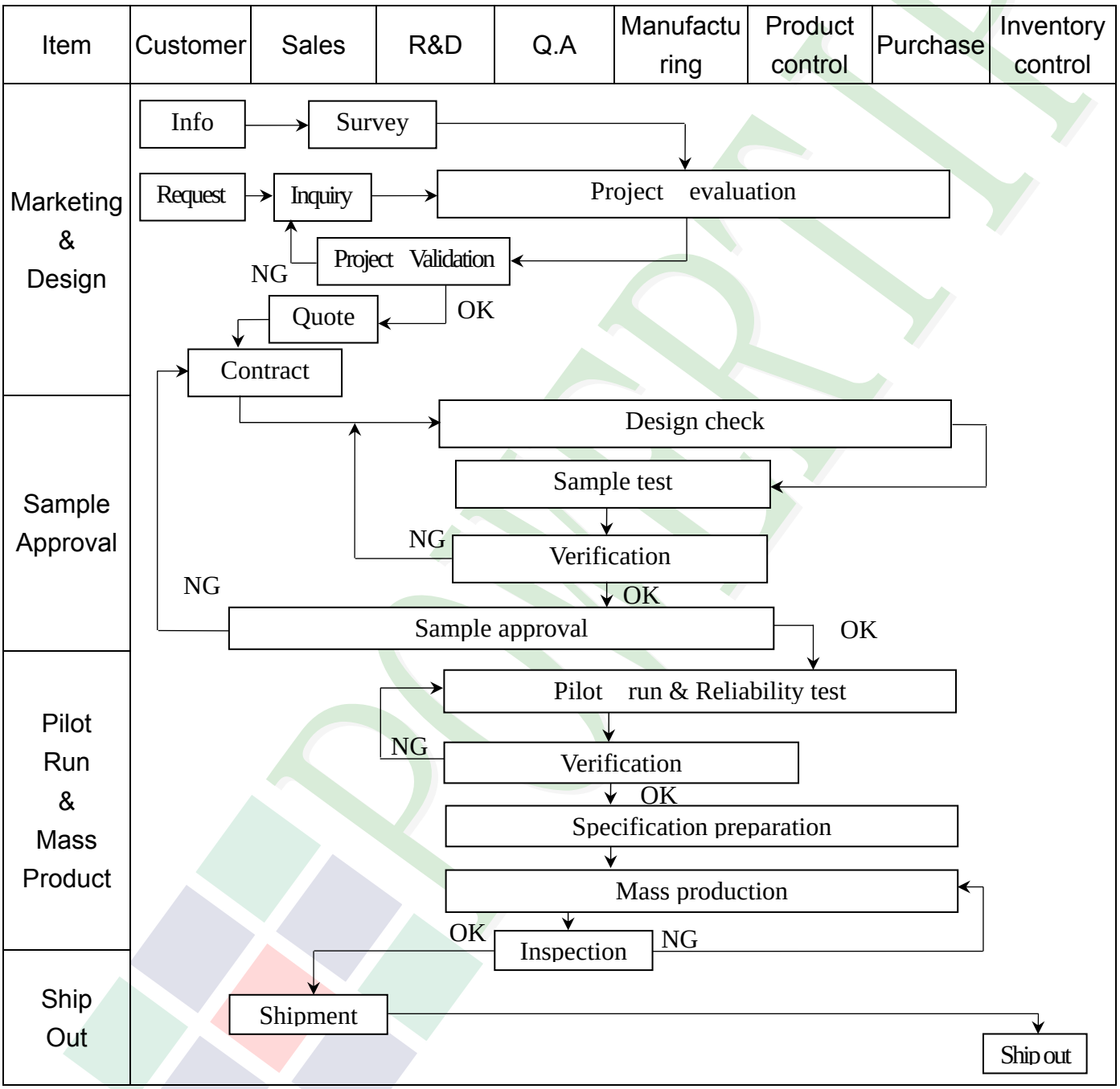

Item	Customer	Sales	R&D	Q.A	Manufacturing	Product control	Purchase	Inventory control
Sales Service	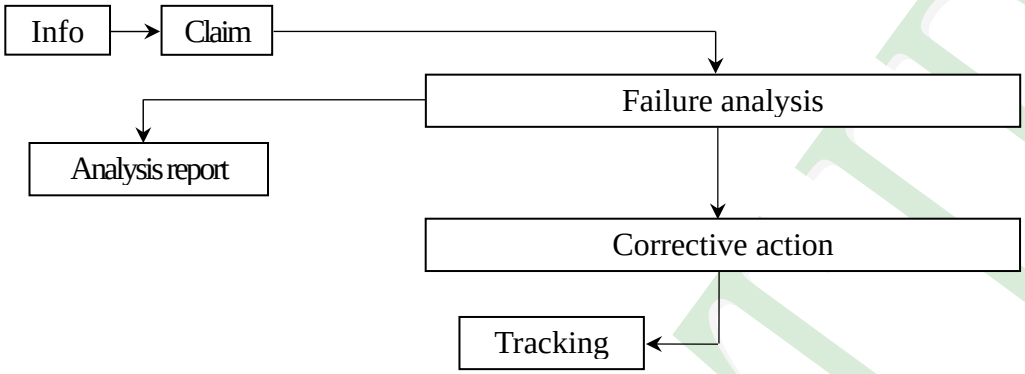							
Q.A Activity	1. ISO 9001 Maintenance Activities 2. Process improvement proposal 3. Equipment calibration 4. Education And Training Activities 5. Standardization Management							

3.2. Inspection Specification

◆Scope：The document shall be applied to TFT-LCD Module for 3.5″ ~15″ (Ver.B01).

◆Inspection Standard：MIL-STD-105E Table Normal Inspection Single Sampling Level Ⅱ.

◆Equipment：Gauge、MIL-STD、Powertip Tester、Sample

◆Defect Level：Major Defect AQL： 0.4 ; Minor Defect AQL： 1.5

◆OUT Going Defect Level：Sampling.

◆Standard of the product appearance test：

a. Manner of appearance test：

(1). The test best be under 20W×2 fluorescent light(about 300lux ～500lux)

，and distance of view must be at 30~40 cm.

(2). The test direction is base on about around 45° of vertical line.

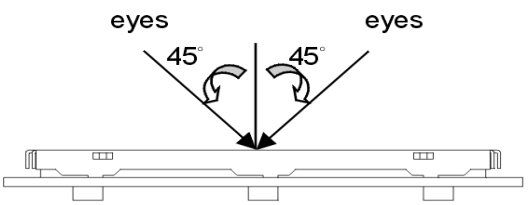

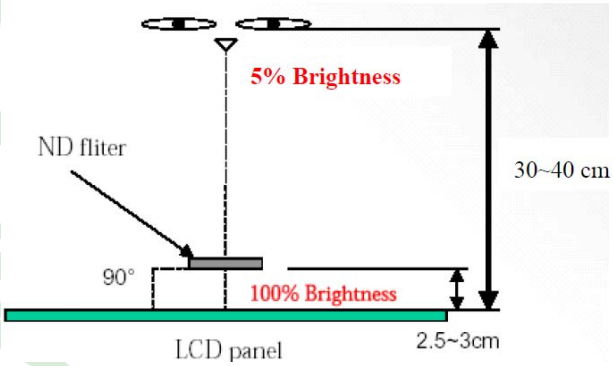

(3). Definition of area.

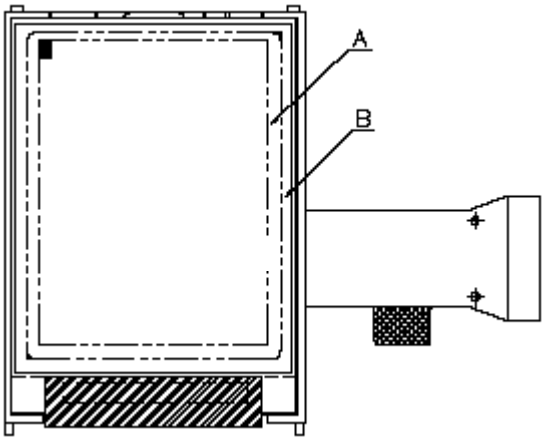

A area : viewing area

B area : Outside of viewing area

(4). Standard of inspection： (Unit：mm)

◆Specification For TFT-LCD Module 3.5″ ~15″：

(Ver.B01)

<table>
<tr><th>NO</th><th>Item</th><th>Criterion</th><th>Level</th></tr>
<tr><td rowspan="3">01</td><td rowspan="3">Product condition</td><td>1.1The part number is inconsistent with work order of production.</td><td>Major</td></tr>
<tr><td>1.2 Mixed product types.</td><td>Major</td></tr>
<tr><td>1.3 Assembled in inverse direction.</td><td>Major</td></tr>
<tr><td>02</td><td>Quantity</td><td>2.1The quantity is inconsistent with work order of production.</td><td>Major</td></tr>
<tr><td>03</td><td>Outline dimension</td><td>3.1 Product dimension and structure must conform to structure diagram.</td><td>Major</td></tr>
<tr><td rowspan="6">04</td><td rowspan="6">Electrical Testing</td><td>4.1 Missing line character and icon.</td><td>Major</td></tr>
<tr><td>4.2 No function or no display.</td><td>Major</td></tr>
<tr><td>4.3 Display malfunction.</td><td>Major</td></tr>
<tr><td>4.4 LCD viewing angle defect.</td><td>Major</td></tr>
<tr><td>4.5 Current consumption exceeds product specifications.</td><td>Major</td></tr>
<tr><td>4.6 Mura can not be seen through 5% ND filter at 50% Gray screen , should be judged by the viewing angle of 90 degree.</td><td>Minor</td></tr>
<tr><td>05</td><td>Dot defect
(Bright dot、Dark dot)
On -display</td><td>
<table>
<tr><th colspan="2">Item</th><th>Acceptance (Q’ty)</th></tr>
<tr><td rowspan="4">Dot Defect</td><td>Bright Dot</td><td>≦ 4</td></tr>
<tr><td>Dark Dot</td><td>≦ 5</td></tr>
<tr><td>Joint Dot</td><td>≦ 3</td></tr>
<tr><td>Total</td><td>≦ 7</td></tr>
</table>
5.1 Inspection pattern：full white , full black , Red , Green and blue screens.
5.2 It is defined as dot defect if defect area ＞1/2 dot.
5.3 The distance between two dot defect ≧5 mm.
5.4 Bright dot that can not be seen through 5% ND filter.
</td><td>Minor</td></tr>
</table>

◆Specification For TFT-LCD Module 3.5″ ~15″：

(Ver.B01)

<table>
<tr><th>NO</th><th>Item</th><th>Criterion</th><th>Level</th></tr>
<tr><td>06</td><td>Black or white dot、scratch、contamination

Round type
 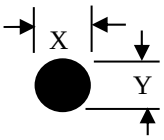

Φ＝(x＋y) / 2

Line type
 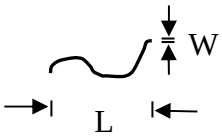
</td><td>6.1 Round type (Non-display or display)：
<table>
<tr><th rowspan="2">Dimension (diameter：Φ)</th><th colspan="2">Acceptance (Q’ty)</th></tr>
<tr><th>A area</th><th>B area</th></tr>
<tr><td>Φ ≦ 0.25</td><td>Ignore</td><td rowspan="4">Ignore</td></tr>
<tr><td>0.25 ＜ Φ ≦ 0.50</td><td>5</td></tr>
<tr><td>Φ ＞ 0.50</td><td>0</td></tr>
<tr><td>Total</td><td>5</td></tr>
</table>
6.2 Line type(Non-display or display)：
<table>
<tr><th rowspan="2">module size</th><th rowspan="2">Length (L)</th><th rowspan="2">Width (W)</th><th colspan="2">Acceptance (Q’ty)</th></tr>
<tr><th>A area</th><th>B area</th></tr>
<tr><td rowspan="5">3.5” to less 9”</td><td>---</td><td>W ≦ 0.03</td><td>Ignore</td><td rowspan="5">Ignore</td></tr>
<tr><td>L ≦10.0</td><td>0.03 ＜W ≦ 0.05</td><td>4</td></tr>
<tr><td>L ≦5.0</td><td>0.05 ＜W ≦ 0.10</td><td>2</td></tr>
<tr><td>---</td><td>W ＞0.10</td><td>As round type</td></tr>
<tr><td colspan="2">Total</td><td>5</td></tr>
<tr><td rowspan="4">9” to 15”</td><td>---</td><td>W ≦ 0.05</td><td>Ignore</td><td rowspan="4">Ignore</td></tr>
<tr><td>L ≦10.0</td><td>0.05 ＜W ≦ 0.10</td><td>5</td></tr>
<tr><td>---</td><td>W ＞0.10</td><td>As round type</td></tr>
<tr><td colspan="2">Total</td><td>5</td></tr>
</table></td><td>Minor</td></tr>
<tr><td>07</td><td>Polarizer Bubble</td><td>
<table>
<tr><th rowspan="2">Dimension (diameter：Φ)</th><th colspan="2">Acceptance (Q’ty)</th></tr>
<tr><th>A area</th><th>B area</th></tr>
<tr><td>Φ ≦ 0.25</td><td>Ignore</td><td rowspan="5">Ignore</td></tr>
<tr><td>0.25 ＜ Φ ≦ 0.50</td><td>4</td></tr>
<tr><td>0.50 ＜ Φ ≦ 0.80</td><td>1</td></tr>
<tr><td>Φ ＞ 0.80</td><td>0</td></tr>
<tr><td>Total</td><td>5</td></tr>
</table></td><td>Minor</td></tr>
</table>

◆Specification For TFT-LCD Module 3.5″ ~15″：

(Ver.B01)

NO	Item	Criterion	Level
08	The crack of glass	**Symbols：** X : The length of crack　　Y : The width of crack. Z : The thickness of crack　　W : terminal length t : The thickness of glass　　a : LCD side length 8.1 General glass chip： 8.1.1 Chip on panel surface and crack between panels: 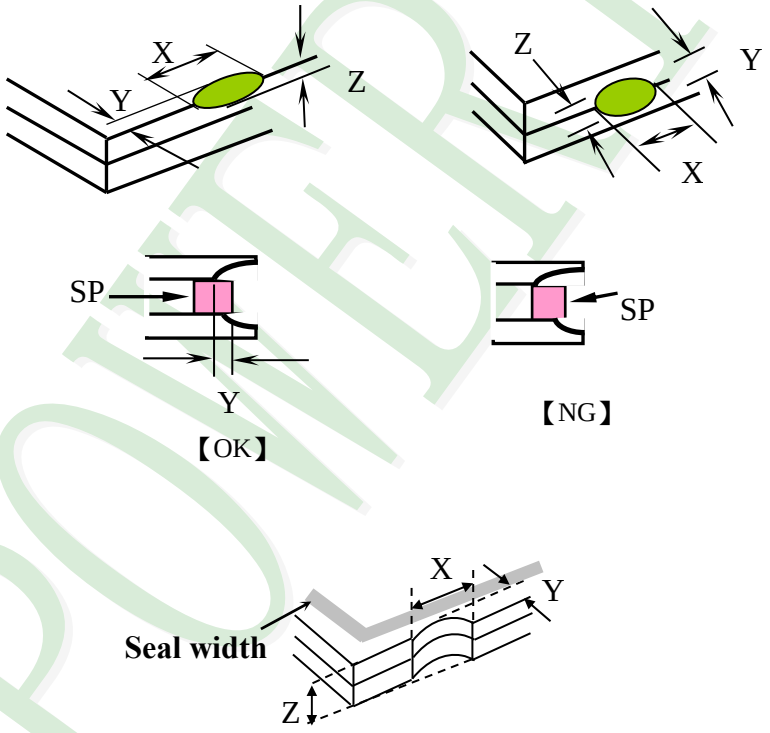 X : ≦ a ; Y : Crack can't enter viewing area ; Z : ≦1/2 t X : ≦ a ; Y : Crack can't exceed the half of SP width. ; Z : 1/2 t < Z ≦2 t	Minor

◆Specification For TFT-LCD Module 3.5″ ~15″ : (Ver.B01)

<table>
<tr><th>NO</th><th>Item</th><th>Criterion</th><th>Level</th></tr>
<tr><td rowspan="2">08</td><td rowspan="2">The crack of glass</td><td>
Symbols :

X : The length of crack
Z : The thickness of crack
t : The thickness of glass
Y : The width of crack.
W : terminal length
a : LCD side length

8.1.2 Corner crack :
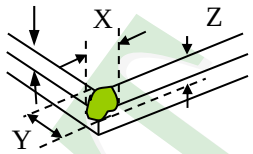

<table>
<tr><th>X</th><th>Y</th><th>Z</th></tr>
<tr><td>≦1/5 a</td><td>Crack can't enter viewing area</td><td>Z ≦ 1/2 t</td></tr>
<tr><td>≦1/5 a</td><td>Crack can't exceed the half of SP width.</td><td>1/2 t ＜ Z ≦ 2 t</td></tr>
</table>
</td><td rowspan="2">Minor</td></tr>
<tr><td>
8.2 Protrusion over terminal :
8.2.1 Chip on electrode pad :
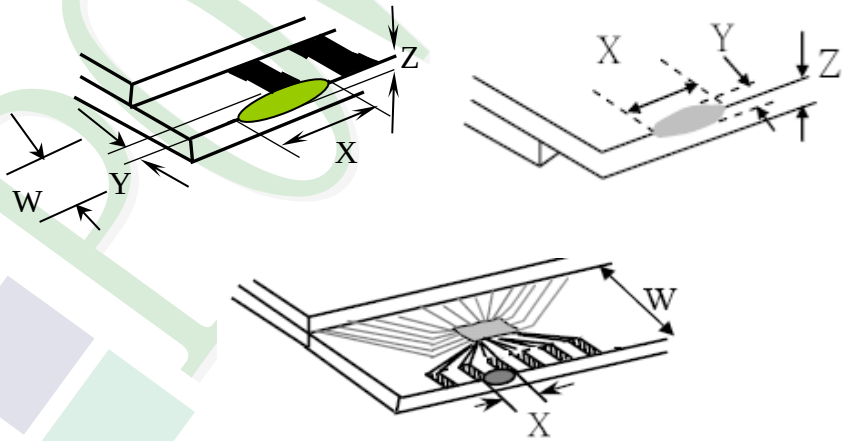

<table>
<tr><th></th><th>X</th><th>Y</th><th>Z</th></tr>
<tr><td>Front</td><td>≦ a</td><td>≦ 1/2 W</td><td>≦ t</td></tr>
<tr><td>Back</td><td>≦ a</td><td>≦ W</td><td>≦ 1/2 t</td></tr>
</table>
</td></tr>
</table>

◆Specification For TFT-LCD Module 3.5″ ~15″：

(Ver.B01)

NO	Item	Criterion	Level
08	The crack of glass	Symbols： X : The length of crack　　Y : The width of crack. Z : The thickness of crack　　W : terminal length t : The thickness of glass　　a : LCD side length 8.2.2 Non-conductive portion： 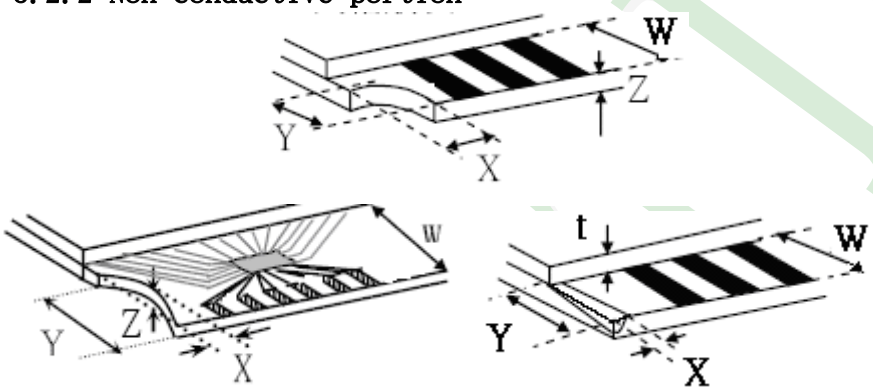 X ≦ 1/3 a　Y ≦ W　Z ≦t ⊙ If the chipped area touches the ITO terminal, over 2/3 of the ITO must remain and be inspected according to electrode terminal specifications. 8.2.3 Glass remain : 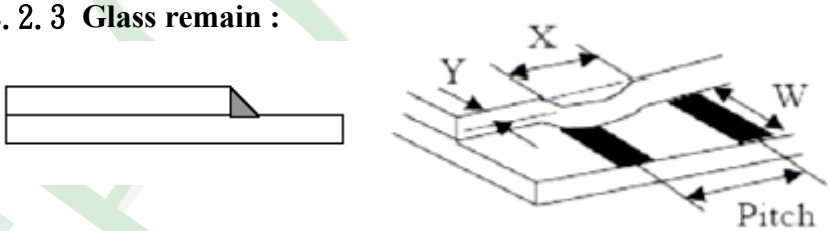 X ≦ a　Y ≦ 1/3 W　Z ≦t 8.2.4 Cracking 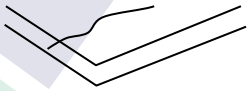 Not Allowed	Minor

◆Specification For TFT-LCD Module 3.5″ ~15″：

(Ver.B01)

NO	Item	Criterion	Level
09	Backlight elements	9.1 Backlight can't work normally.	Major
		9.2 Backlight doesn't light or color is wrong.	Major
		9.3 Illumination source flickers when lit.	Major
10	General appearance	10.1 Pin type、quantity、dimension must match type in structure diagram.	Major
		10.2 No short circuits in components on PCB or FPC .	Major
		10.3 Parts on PCB or FPC must be the same as on the production characteristic chart .There should be no wrong parts , missing parts or excess parts.	Major
		10.4 Product packaging must the same as specified on packaging specification sheet.	Minor
		10.5 The folding and peeled off in polarizer are not acceptable.	Minor
		10.6 The PCB or FPC between B/L assembled distance(PCB or FPC) is ≦1.5 mm.	Minor

4. RELIABILITY TEST

4.1 Reliability Test Condition (Ver.B01)

<table>
<tr><th>NO.</th><th>TEST ITEM</th><th>TEST CONDITION</th></tr>
<tr><td>1</td><td>High Temperature Storage Test</td><td>Keep in +80 ±2℃ 240 hrs
Surrounding temperature, then storage at normal condition 4hrs.</td></tr>
<tr><td>2</td><td>Low Temperature Storage Test</td><td>Keep in -30 ±2℃ 240 hrs
Surrounding temperature, then storage at normal condition 4hrs.</td></tr>
<tr><td>3</td><td>High Temperature / High Humidity Storage Test</td><td>Keep in +60℃ / 90% R.H duration for 240 hrs
Surrounding temperature, then storage at normal condition 4hrs.
(Excluding the polarizer)</td></tr>
<tr><td>4</td><td>Temperature Cycling Storage Test</td><td>-30℃ → +25℃ → +80℃ → +25℃
(30mins) (5mins) (30mins) (5mins)
20 Cycle
Surrounding temperature, then storage at normal condition 4hrs.</td></tr>
<tr><td rowspan="2">5</td><td rowspan="2">ESD Test</td><td>Air Discharge:
Apply 2 KV with 5 times
Discharge for each polarity +/-
Contact Discharge:
Apply 250 V with 5 times
discharge for each polarity +/-</td></tr>
<tr><td>1. Temperature ambiance : 15℃～35℃
2. Humidity relative : 30%～60%
3. Energy Storage Capacitance(Cs+Cd) : 150pF±10%
4. Discharge Resistance(Rd) : 330Ω±10%
5. Discharge, mode of operation :
Single Discharge (time between successive discharges at least 1 sec)
(Tolerance if the output voltage indication : ±5%)</td></tr>
<tr><td>6</td><td>Vibration Test (Packaged)</td><td>1. Sine wave 10～55 Hz frequency (1 min)
2. The amplitude of vibration :1. 5 mm
3. Each direction (X、Y、Z) duration for 2 Hrs</td></tr>
<tr><td>7</td><td>Drop Test (Packaged)</td><td><table><tr><th>Packing Weight (Kg)</th><th>Drop Height (cm)</th></tr><tr><td>0 ~ 45. 4</td><td>122</td></tr><tr><td>45. 4 ~ 90. 8</td><td>76</td></tr><tr><td>90. 8 ~ 454</td><td>61</td></tr><tr><td>Over 454</td><td>46</td></tr></table>
Drop direction :※1 corner / 3 edges / 6 sides each 1times</td></tr>
</table>

5. PRECAUTION RELATING PRODUCT HANDLING

5.1 SAFETY

5.1.1 If the LCD panel breaks , be careful not to get the liquid crystal to touch your skin.

5.1.2 If the liquid crystal touches your skin or clothes , please wash it off immediately by using soap and water.

5.2 HANDLING

5.2.1 Avoid any strong mechanical shock which can break the glass.

5.2.2 Avoid static electricity which can damage the CMOS LSI—When working with the module , be sure to ground your body and any electrical equipment you may be using.

5.2.3 Do not remove the panel or frame from the module.

5.2.4 The polarizing plate of the display is very fragile. So , please handle it very carefully ,do not touch , push or rub the exposed polarizing with anything harder than an HB pencil lead (glass , tweezers , etc.)

5.2.5 Do not wipe the polarizing plate with a dry cloth , as it may easily scratch the surface of plate.

5.2.6 Do not touch the display area with bare hands , this will stain the display area.

5.2.7 Do not use ketonics solvent & aromatic solvent. Use with a soft cloth soaked with a cleaning naphtha solvent.

5.2.8 To control temperature and time of soldering is 320±10℃and 3-5 sec.

5.2.9 To avoid liquid (include organic solvent) stained on LCM .

5.3 STORAGE

5.3.1 Store the panel or module in a dark place where the temperature is 25℃ ±5℃ and the humidity is below 65% RH.

5.3.2 Do not place the module near organics solvents or corrosive gases.

5.3.3 Do not crush , shake , or jolt the module.

5.4 TERMS OF WARRANTY

5.4.1 Applicable warrant period

The period is within thirteen months since the date of shipping out under normal using and storage conditions.

5.4.2 Unaccepted responsibility

This product has been manufactured to your company's specification as a part for use in your company's general electronic products. It is guaranteed to perform according to delivery specifications. For any other use apart from general electronic equipment , we cannot take responsibility if the product is used in nuclear power control equipment , aerospace equipment , fire and security systems or any other applications in which there is a direct risk to human life and where extremely high levels of reliability are required.

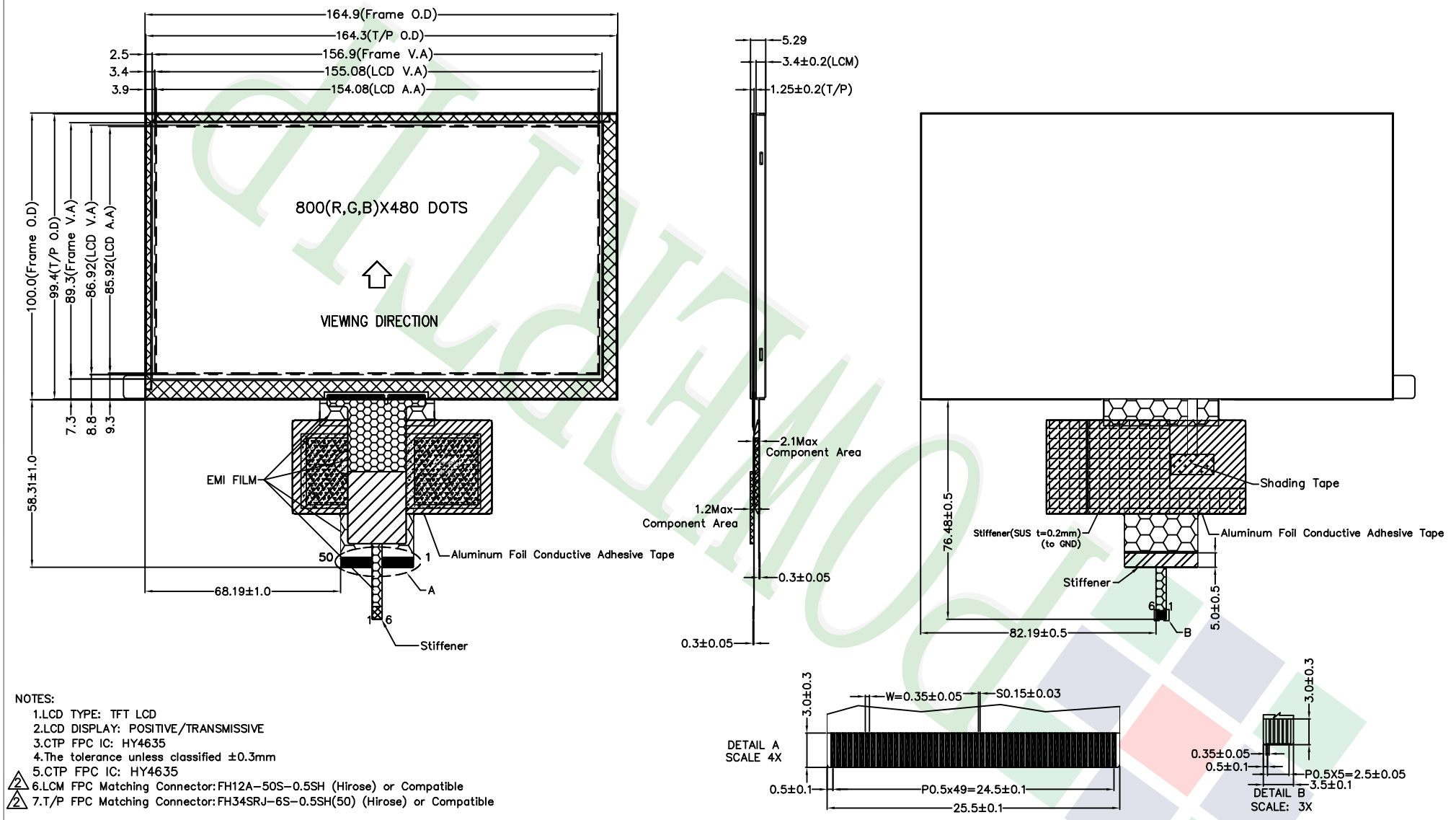

NOTES:

1. LCD TYPE: TFT LCD
2. LCD DISPLAY: POSITIVE/TRANSMISSIVE
3. CTP FPC IC: HY4635
4. The tolerance unless classified ±0.3mm
5. CTP FPC IC: HY4635
6. LCM FPC Matching Connector: FH12A-50S-0.5SH (Hirose) or Compatible
7. T/P FPC Matching Connector: FH34SRJ-6S-0.5SH(50) (Hirose) or Compatible

REV	REV BY	REVISER	DATE
007			
006			
005			
004			
003			
002	MODIFY DRAWING	Kevin	2020/05/08
001	NEW DRAWING	Kevin	2019/08/16

PART NO: PH800480T013-IHC28

DRAWING NAME : LMD-PH800480T013-IHC28

TITLE: LCD MODULE DRAWING

久正光電股份有限公司
POWERTIP TECHNOLOGY CORPORATION

Design	Kevin	(3)	Surface		
Check	Stone	Unit	MM	Material	
Approve	Oliver	Scale	1:1	Thickness	
		Page	1/1	Quantity	

Length(Mm) (mm) \ Tolerance / Precision	Precision Level
1 ~ 4	-
4 ~ 16	-
16 ~ 63	-
63 ~ 250	-
250 ~ 1000	-

PT-A-054-01

Ver.001	
Documents NO.	PKG-PH800480T013-IHC28

LCM包裝規格書
LCM Packaging Specifications

Approve	Check	Contact
Oliver	Stone	Kevin

1.包裝材料規格表 (Packaging Material) : (per carton)

No.	Item	Model	Dimensions (mm)	1Pcs Weight	Quantity	Total Weight
1	成品 (LCM)	PH800480T013-IHC28	164.9 X 100.0 X 5.29	0.174	60	10.44
2	靜電袋(1)Antistatic Bag	BAG240170ARABA	240 X 170	0.0048	60	0.288
3	上蓋(2)EPE	FOAM000000078	310 X 250 X 90	0.1	4	0.4
4	下座(3)EPE	FOAM000000079	310 X 250 X 100	0.17	4	0.68
5	海綿墊(4)Foam Rubber Cushion	OTFOAM00006ABA	290 X 240 X 10	0.0058	4	0.0232
6	外紙箱(5)Carton	BX52732536CCBA	527 X 325 X 360	1.092	1	1.092
7						
8						
9						

2.一 整箱總重量 (Total LCD Weight in carton) : 12.92 Kg±10%

3.單箱數量規格表 (Packaging Specifications and Quantity) :

(1)Total LCD quantity in carton : quantity per box 15 x no of boxes 4 = 60

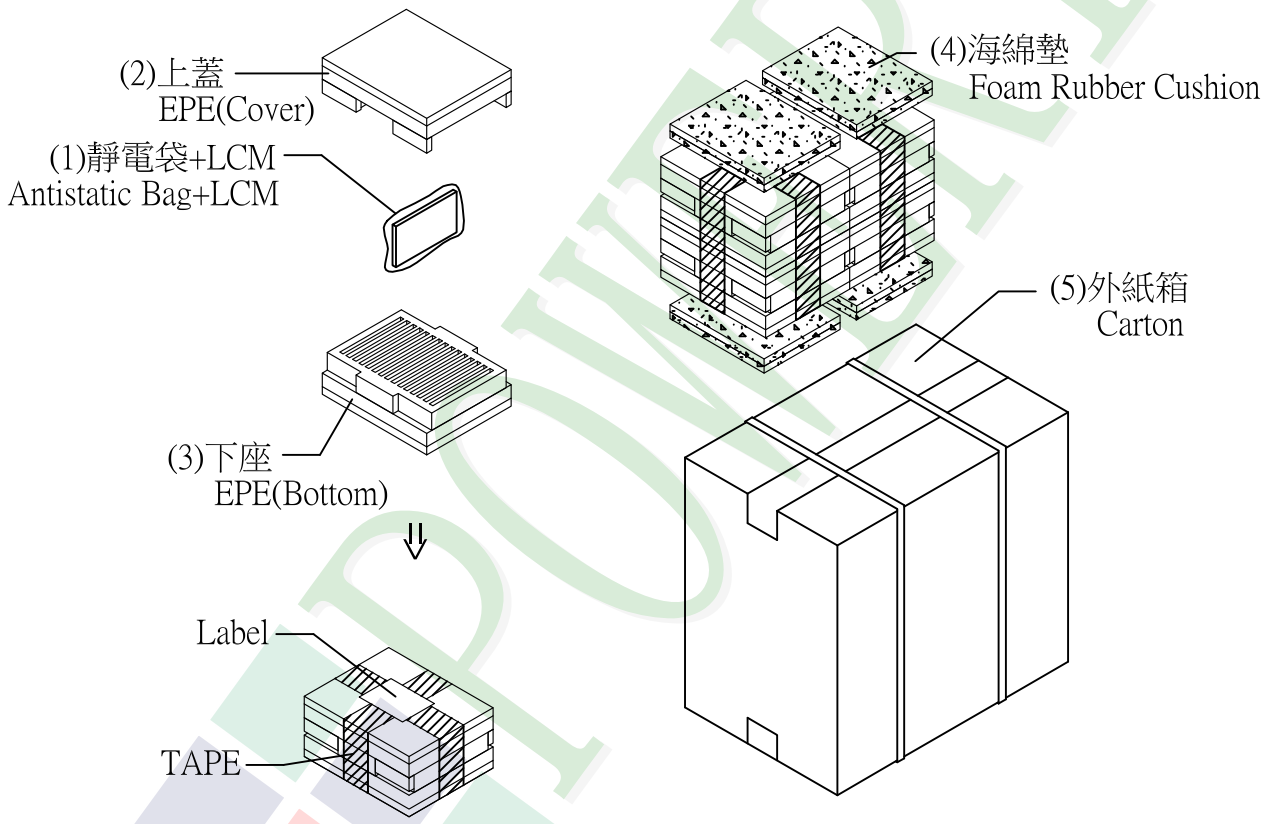

特 記 事 項 (REMARK)

4. 包裝數量不足時需以EPE(舒美墊)填補空槽
EPE:OTFOAMEP0003BA自裁成(166.5X109.0X10mm)