POWERTIP TECH. CORP.

SPECIFICATIONS

CUSTOMER	:	
SAMPLE CODE	:	SH800480T033-IHA
MASS PRODUCTION CODE	:	PH800480T033-IHA
SAMPLE VERSION	:	02
SPECIFICATIONS EDITION	:	006
DRAWING NO. (Ver.)	:	LMD-PH800480T033-IHA(Ver.001)
PACKAGING NO. (Ver.)	:	PKG-PH800480T033-IHA(Ver.003)

Customer Approved

Verified by Martin Steffel

ACTRON THE FACE OF YOUR PRODUCT

M. Steffel

Date:

Approved	Checked	Designer
廖志豪 Rex Liao	張慶源 Yuan Chang	陳宗淇 Howard Chen

POWERTIP 2024.04.15 TW RD APR.

☐ Preliminary specification for design input

■ Specification for sample approval

POWERTIP TECH. CORP.

Headquarters: No.8, 6th Road, Taichung Industrial Park, Taichung, Taiwan 台中市 407 工業區六路 8 號

TEL: 886-4-2355-8168 FAX: 886-4-2355-8166

E-mail: sales@powertip.com.tw Http://www.powertip.com.tw

History of Version

Date (mm / dd / yyyy)	Ver.	Edi.	Description	Page	Design by
06/03/2020	**01**	**001**	**New Sample.**	**-**	**Howard**
08/27/2020	**02**	**002**	**Modify FPC Part Number From FPC0000001429 modify to FPC0000001518**	**-**	**Howard**
10/16/2020	**02**	**003**	**Fix Datasheet format error**	**all**	**Howard**
12/21/2021	**02**	**004**	**Modify Packing Specification**	**Appendix**	**Howard**
03/12/2023	**02**	**005**	**Modify ID Pins Definition Modify Input Clock and Data Timing**	**12 13**	**Howard**
04/03/2024	**02**	**006**	**Modify Packing Specification**	**Appendix**	**Howard**

Contents

1. SPECIFICATIONS
   - 1.1 Features
   - 1.2 Mechanical Specifications
   - 1.3 Absolute Maximum Ratings
   - 1.4 DC Electrical Characteristics
   - 1.5 Optical Characteristics
   - 1.6 Backlight Characteristics

2. MODULE STRUCTURE
   - 2.1 Counter Drawing
   - 2.2 Interface Pin Description
   - 2.3 Timing Characteristics

3. QUALITY ASSURANCE SYSTEM
   - 3.1 Quality Assurance Flow Chart
   - 3.2 Inspection Specification

4. RELIABILITY TEST
   - 4.1 Reliability Test Condition

5. PRECAUTION RELATING PRODUCT HANDLING
   - 5.1 Safety
   - 5.2 Handling
   - 5.3 Storage
   - 5.4 Terms of Warranty

Appendix：1.LCM Drawing
2. Packing Specification

Note : For detailed information please refer to IC data sheet :
Primacy(TFT LCD):
ILITEK: ILI6122M / ILI5960
(Or compatible IC)

1. SPECIFICATIONS

1.1 Features

Item	Standard Value
Display Resolution	800 * 3 (RGB) * 480 Dots
LCD Type	a-Si TFT , Normally white, Transmissive type
Screen size(inch)	5.0 inch
Viewing Direction	6 O'clock (Gray scale Inversion)*1
	12 O'clock (*2)
Surface treatment	Anti-Glare
Color configuration	RGB Vertical Strip
Backlight Type	White LED B/L
Weight	60 g
Interface	24 Bits RGB interface
ROHS	THIS PRODUCT CONFORMS THE ROHS OF PTC Detail information please refer website : http://www.powertip.com.tw/news_detail.php?Key=1&cID=1

Note:

*1. For saturated color display content (eg. pure-red, pure-green, pure-blue or pure-colors -combinations).

*2. "For display content based upon multicolor images eg. photos, RGB defined user interfaces"

1.2 Mechanical Specifications

Item	Standard Value	Unit
Outline Dimension	121.0(W) x 75.9 (L) x 3.1(H)	mm

LCD panel

Item	Standard Value	Unit
Active Area	108.0 (W) * 64.8 (L)	mm

Note : For detailed information please refer to LCM drawing

1.3 Absolute Maximum Ratings

Module

Item	Symbol	Condition	Min.	Max.	Unit	Remark
Power Supply for TFT Panel	VDD	GND=0	-0.3	4.5	V	-
Power Supply for Backlight Unit	VCC	GND=0	-0.3	+20.0	V	
Operating Temperature	T_{OP} (Ts)	Note 1	-20	70	°C	
Storage Temperature	T_{ST} (Ta)	Note 2	-30	80	°C	

The absolute maximum rating values of this product are not allowed to be exceeded at any times. Should a module be used with any of the absolute maximum ratings exceeded, the characteristics of the module may not be recovered, or in an extreme case, the module may be permanently destroyed.

Note 1：Ts is the temperature of panel's surface.

Note 2：Ta is the ambient temperature of samples.

1.4 DC Electrical Characteristics

Module GND = 0V, Ta = 25°C

Item	Symbol	Condition	Min.	Typ.	Max.	Unit
Power Supply for TFT Panel	VDD	GND=0V	3.0	3.3	3.6	V
Power Supply for Backlight Unit	VCC	GND=0V	5	12	15	V
Input Voltage for TFT Panel	V_{IH}	GND=0V	0.7VDD	-	VDD	V
	V_{IL}	GND=0V	0	-	0.3VDD	
Supply Current for TFT Panel	IDD	IDD@VDD=3.3V	-	90	140	mA
Supply Current for Backlight Unit	ICC	ICC@VCC=5V	-	400	600	
Supply Current for Backlight Unit	ICC	ICC@VCC=12V	-	150	250	
Input Voltage for PWM Signal	VPH	GND=0V	1.2	-	-	V
	VPL	GND=0V	-	-	0.4	V
Dimming Clock Rate	fP	GND=0V	5	-	100	KHz

1.5 Optical Characteristics

TFT LCD Module VDD= 3.3 V, Ta=25°C

Item		Symbol	Condition	Min.	Typ.	Max.	unit	-
Response time	Tr+Tf	25℃	-	-	30	45	ms	-
Viewing angle	Top	θY+	CR ≥ 10		60	-	Deg.	Note 4
	Bottom	θY-			60	-		
	Left	θX-			60	-		
	Right	θX+			60	-		
Contrast ratio		CR	Ta = 25°C θX , θY = 0°	500	600	-	-	Note 3
Color of CIE Coordinate （With B/L）	White	X		0.24	0.29	0.34	-	Note1
		Y		0.26	0.31	0.36		
	Red	X		0.51	0.56	0.61		
		Y		0.28	0.33	0.38		
	Green	X		0.29	0.34	0.39		
		Y		0.54	0.59	0.64		
	Blue	X		0.08	0.13	0.18		
		Y		0.03	0.08	0.13		
Average Brightness Pattern=white display (With LCD)*1		IV	VCC=5.0V PWM="High" (Duty=100%)	800	1000	-	cd/m2	Note1
Uniformity (With LCD)*2		△B	VCC=5.0V PWM="High" (Duty=100%)	70	-	-	%	Note1

Note 1:

*1：△B=B(min) / B(max) * 100%

*2：Measurement Condition for Optical Characteristics:

a：Environment: 25℃±5℃ / 60±20%R.H，no wind，dark room below 10 Lux at typical lamp current and typical operating frequency.

b：Measurement Distance: 500 ± 50 ㎜ ，(θ= 0°)

c：Equipment: TOPCON BM-7 fast，(field 1°)，after 10 minutes operation.

d：The uncertainty of the C.I.E coordinate measurement ±0.01，Average Brightness ± 4%

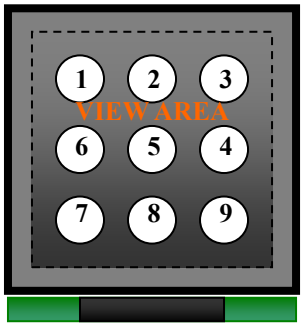

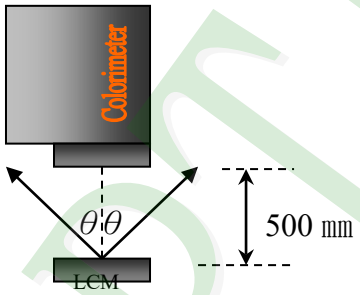

Colorimeter=BM-7 fast

To be measured at the center area of panel with a viewing cone of 1° by Topcon luminance meter BM-7, after 10 minutes operation (module)

Note2: Definition of response time:

The output signals of photo detector are measured when the input signals are changed from “black” to “white”(falling time) and from “white” to “black”(rising time), respectively. The response time is defined as the time interval between the 10% and 90% of Amplitudes.

Refer to figure as below:

Normally White

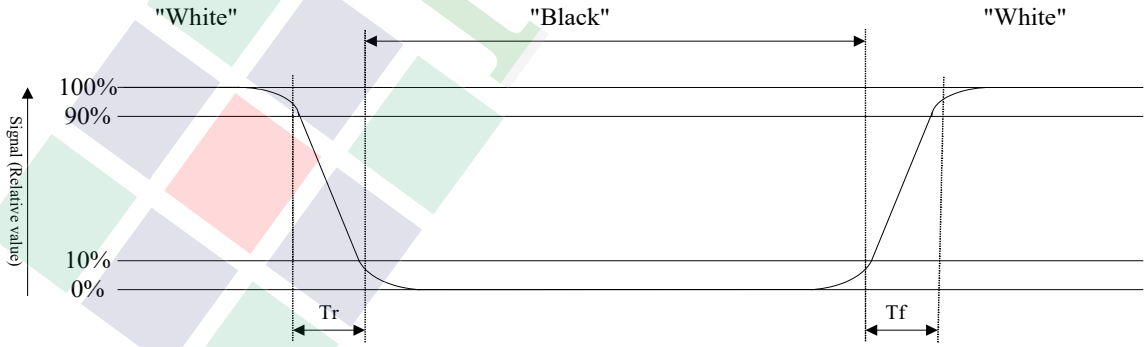

Normally Black

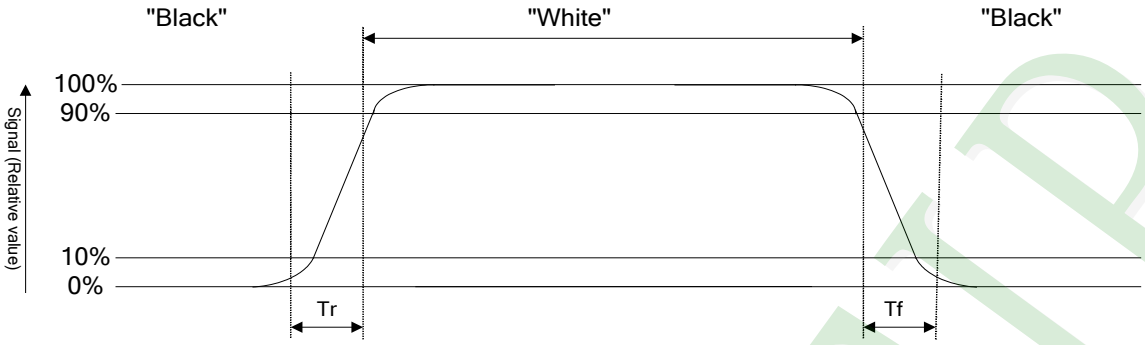

Note3: Definition of contrast ratio:

Contrast ratio is calculated with the following formula

$$\text{Contrast ratio (CR)} = \frac{\text{Photo detector output when LCD is at “White” state}}{\text{Photo detector output when LCD is at “Black” state}}$$

Note4: Definition of viewing angle:

Refer to figure as below:

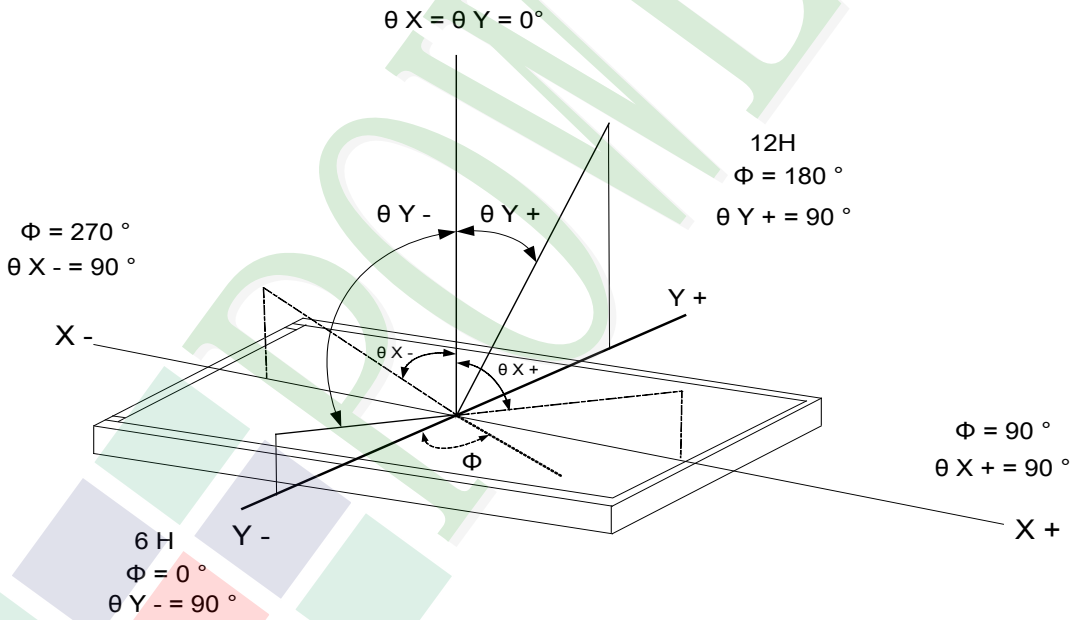

1.6 Backlight Characteristics

Maximum Ratings

Item	Symbol	Min.	Max.	Unit	Remark
LED Forward Current	I_F	180		mA	-
LED Reverse Voltage	V_R	30		V	

Electrical / Optical Characteristics

Item	Symbol	Min.	Typ.	Max.	Unit	Remark
LED Voltage	V_L	16.2	18.0	19.2	V	Note1
LED Current	I_L	-	90	-	mA	-
LED life time	-	50,000	-	-	H_r	Note2

Note 1: The LED Supply Voltage is defined by the number of LED at Ta=25℃ and I_L =90 mA.

Note 2: The "LED life time" is defined as the module brightness decrease to 50% original brightness at Ta=25℃ and I_L =90 mA. The LED life time could be decreased if operating I_L is larger than 90 mA.

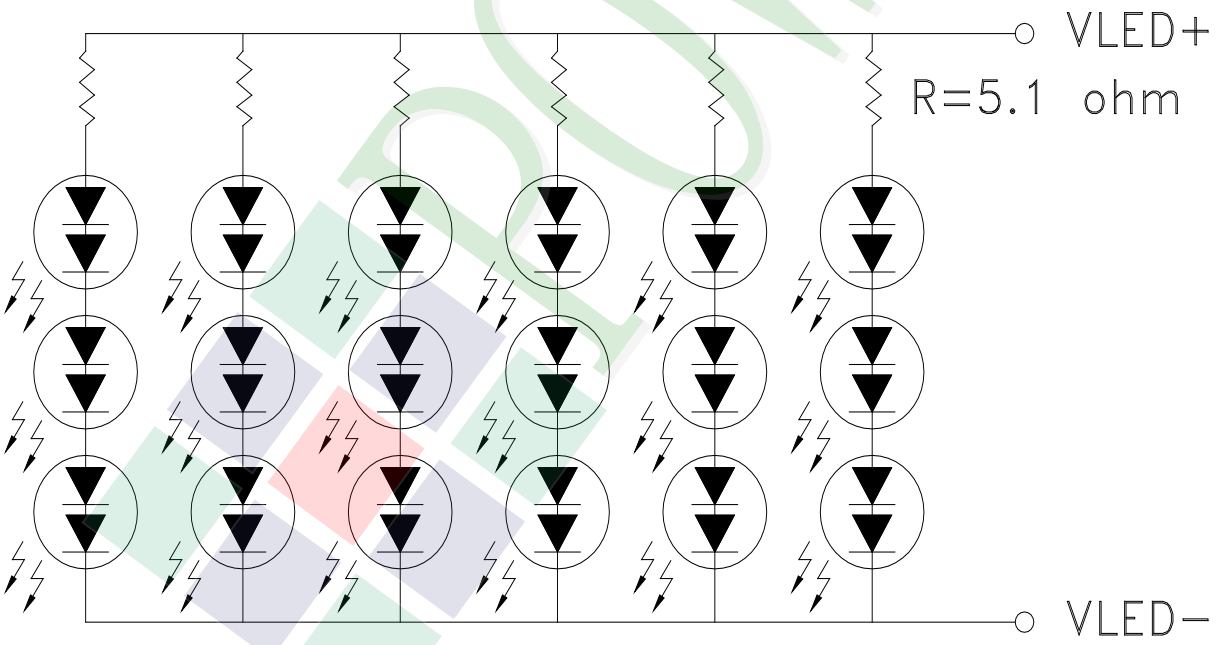

2. MODULE STRUCTURE

2.1 Counter Drawing

2.1.1 LCM Mechanical Diagram

* See Appendix

2.1.2 Block Diagram

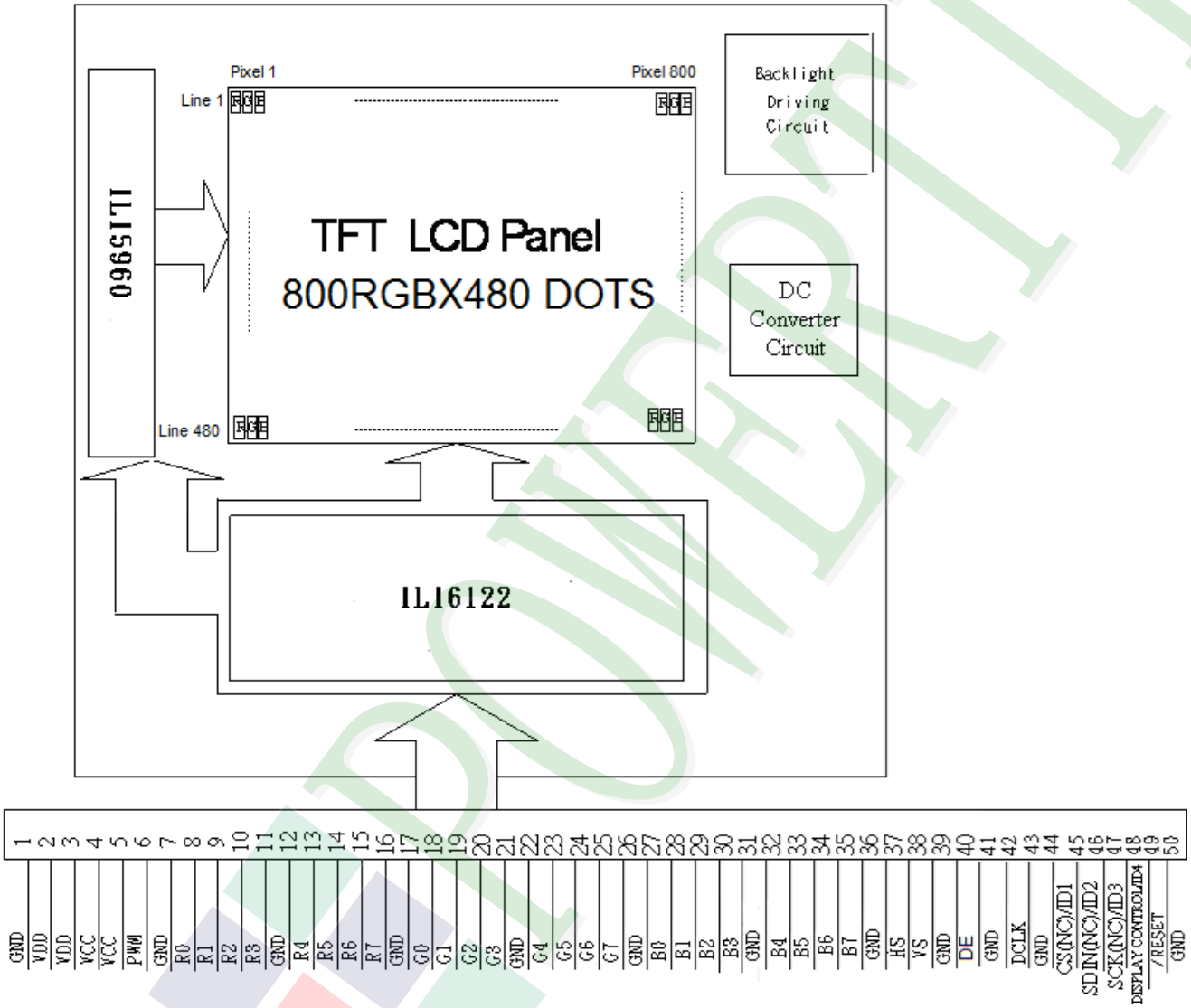

2.2 Interface Pin Description

TFT LCM Interface

Pin#	Name	DESCRIPTION
1	GND	Power ground.
2	VDD	Power for Digital Circuit.
3	VDD	Power for Digital Circuit.
4	VCC	Power For LED backlight.
5	VCC	Power For LED backlight.
6	PWM	Shutdown & Dimming control input for backlight. Do not allow this pin to float. “Hi” =100%, “Low” = 0%.
7	GND	Power ground.
8	R0	Red Data.
9	R1	Red Data.
10	R2	Red Data.
11	R3	Red Data.
12	GND	Power ground.
13	R4	Red Data.
14	R5	Red Data.
15	R6	Red Data.
16	R7	Red Data.
17	GND	Power ground.
18	G0	Green Data.
19	G1	Green Data.
20	G2	Green Data.
21	G3	Green Data.
22	GND	Power ground.
23	G4	Green Data.
24	G5	Green Data.
25	G6	Green Data.
26	G7	Green Data.
27	GND	Power ground.
28	B0	Blue Data.
29	B1	Blue Data.

Pin#	Name	DESCRIPTION
30	B2	Blue Data.
31	B3	Blue Data.
32	GND	Power ground.
33	B4	Blue Data.
34	B5	Blue Data.
35	B6	Blue Data.
36	B7	Blue Data.
37	GND	Power ground.
38	HS	Line synchronization signal. Horizontal Sync Input.
39	VS	Frame synchronization signal. Vertical Sync Input.
40	GND	Power ground.
41	DE	Display enable pin from controller. Data Input Enable.
42	GND	Power ground.
43	DCLK	Sample clock. Data will be latched at the falling edge of DCLK.
44	GND	Power ground.
45	CS(NC) / ID1	No Function./ ID[4:1]These pins select LCM type. See NOTE1
46	SDIN(NC) / ID2	No Function./ ID[4:1]These pins select LCM type. See NOTE1
47	SCK(NC) / ID3	No Function ./ ID[4:1]These pins select LCM type. See NOTE1
48	DISPLAY CONTROL / ID4	Display Enable(Hi Active)./ ID[4:1]These pins select LCM type. See NOTE1
49	/RESET	Global Reset (Low Active).
50	GND	Power ground.

Note1

ID Pins Definition:

	PIN 45 ID1	PIN 46 ID2	PIN 47 ID3	PIN 48 ID4
3.5” Module	X	0	0	X
4.3” Module	X	1	0	X
5.0” Module	X	0	1	X
7.0” Module	X	1	1	X

1. Resistor=10k ohm
2. “X”=No use .

2.3 Timing Characteristics

2.3.1 Input Clock and Data Timing

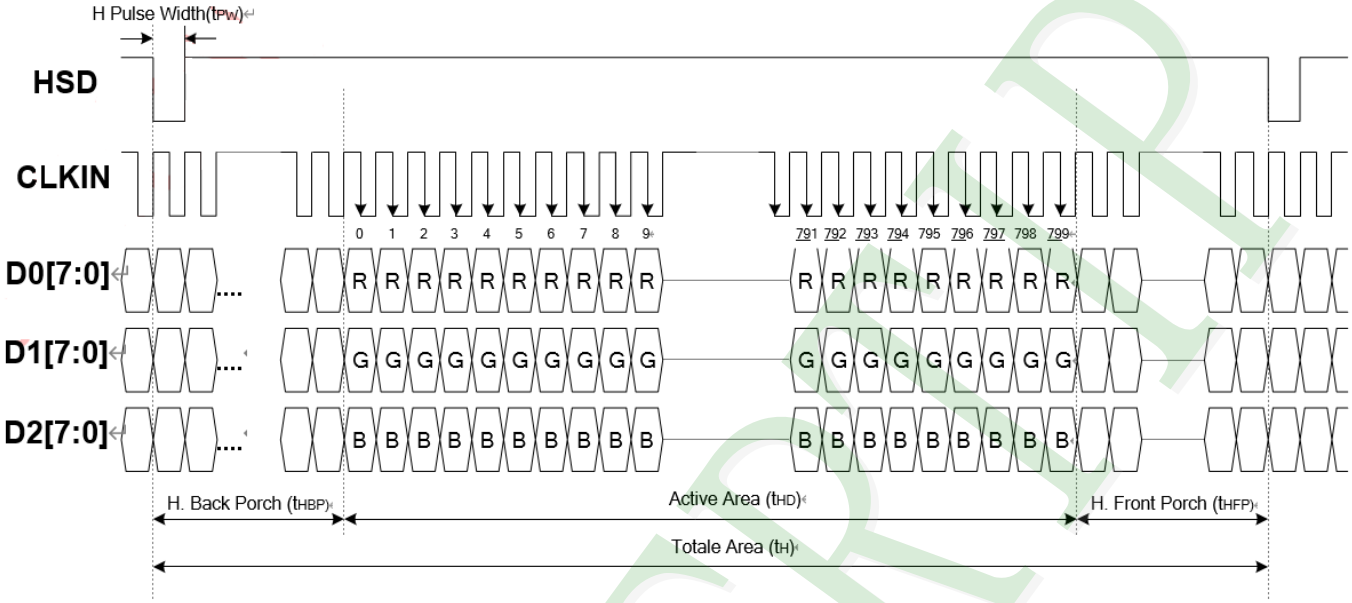

Parameters	Symbol	Spec			Unit	Conditions
		Min.	Typ.	Max.		
VDD Power ON slew rate	t_{POR}	--	--	20	ms	0V ~ 0.9VDD
RSTB pulse width	t_{RST}	10	--	--	us	CLKIN=50MHz
CLKIN cycle time	t_{CPH}	20	--	--	ns	
CLKIN pulse duty	t_{CWH}	40	50	60	%	
VSD setup time	t_{VST}	8	--	--	ns	
VSD hold time	t_{VHD}	8	--	--	ns	
HSD setup time	t_{HST}		--	--	ns	
HSD hold time	t_{HHD}	8	--	--	ns	
Data setup time	t_{DST}	8	--	--	ns	D0[7:0], D1[7:0], D2[7:0] to CLKIN
Data hold time	t_{DHD}	8	--	--	ns	D0[7:0], D1[7:0], D2[7:0] to CLKIN
DE setup time	t_{EST}	8	--	--	ns	
DE hold time	t_{EHD}	8	--	--	ns	
Output stable time	t_{SST}	--	--	6	us	10% to 90% target voltage. CL=120pF, R=10KW
CLKIN frequency	f_{CLK}	--	40	50	MHZ	VDD=3.0 ~ 3.6V
CLKIN cycle time	f_{CLK}	20	25	--	ns	
CLKIN pulse duty	t_{CWH}	40	50	60	%	T_{CLK}
Time from HSD to Source output	t_{HSO}	--	20	--	CLKIN	
Time from HSD to LD	t_{HLD}	--	20	--	CLKIN	Note (2)
Time from HSD to STV	t_{HSTV}	--	2	--	CLKIN	
Time from HSD to CKV	t_{HCKV}		20	--	CLKIN	
Time from HSD to OEV	t_{HOEV}	--	4	--	CLKIN	
LD pulse width	t_{WLD}	--	10		CLKIN	Note (2)
CKV pulse width	t_{WCKV}	--	66	--	CLKIN	
OEV pulse width	t_{WOEV}	--	74	--	CLKIN	

Note: (1) VDD=3.0 ~ 3.6V, VDDA=6.5~13.5V, DGND=AGND=0V, Ta=-20~+85℃

(2) The contents of the data register are transferred to the latch circuit at the rising edge of LD. Then the gray scale voltage is output from the device at the falling edge of LD.

2.3.2 Vertical input timing

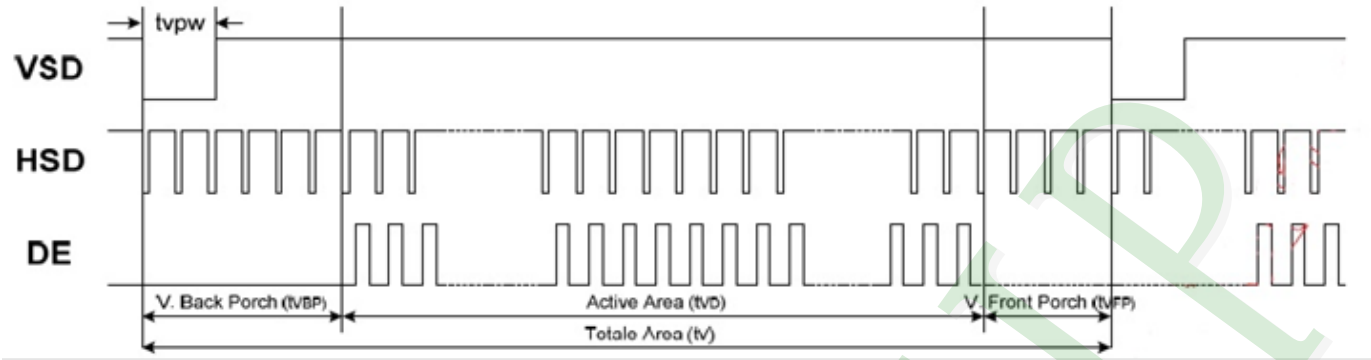

Parameter	Symbol	Value			Unit
		Min	Typ	Max	
Vertical display area	tvd		480		H
VSYNC period time	tv	510	525	650	H
VSYNC pulse width	tvpw	1	-	20	H
VSYNC ack Porch(Blanking)	tvb	23	23	23	H
VSYNC Front Proch	tvfb	7	22	147	H

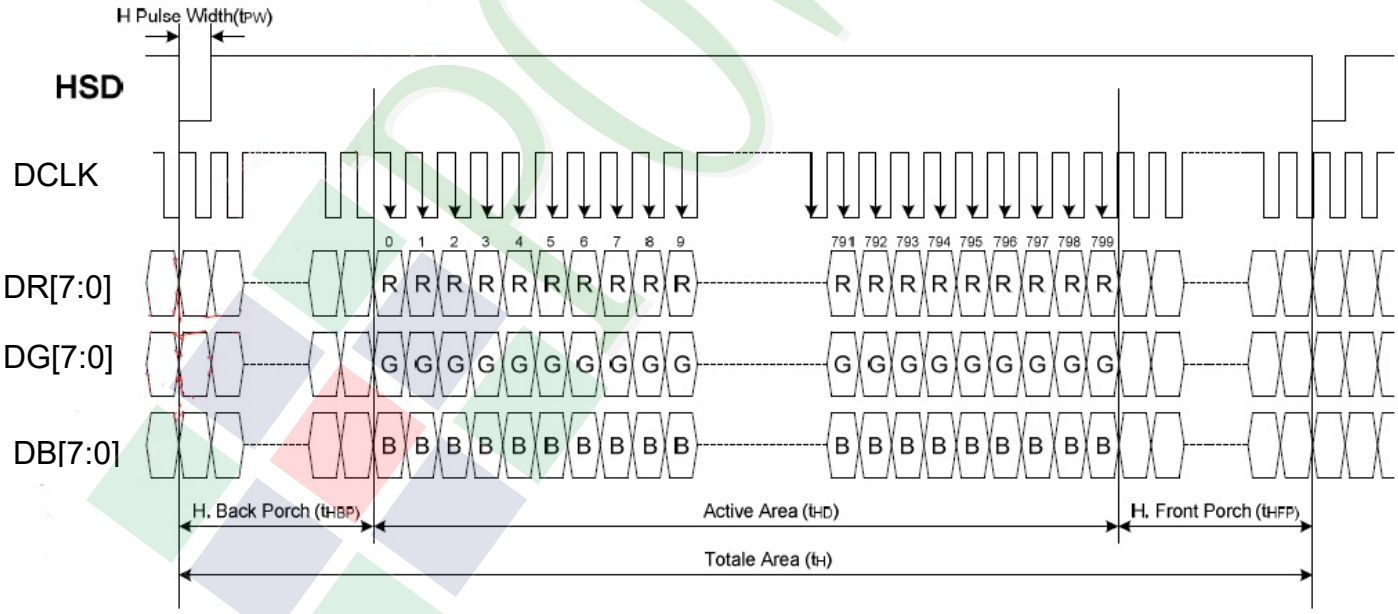

Parameter		Symbol	Value			Unit
			Min	Typ	Max	
Horizontal display area		thd	800			DCLK
DCLK frequency		fclk	-	33.3	50	MHz
1 Horizontal Line		th	862	1056	1200	DCLK
HSD pulse width	Min	thpw	-	1	-	
	Typ		-	-	-	
	Max		-	40	-	
HSD Back Porch (Blacking)		thp	46	46	46	
HSD Front Proch		thfb	16	210	354	

3. QUALITY ASSURANCE SYSTEM

3.1 Quality Assurance Flow Chart

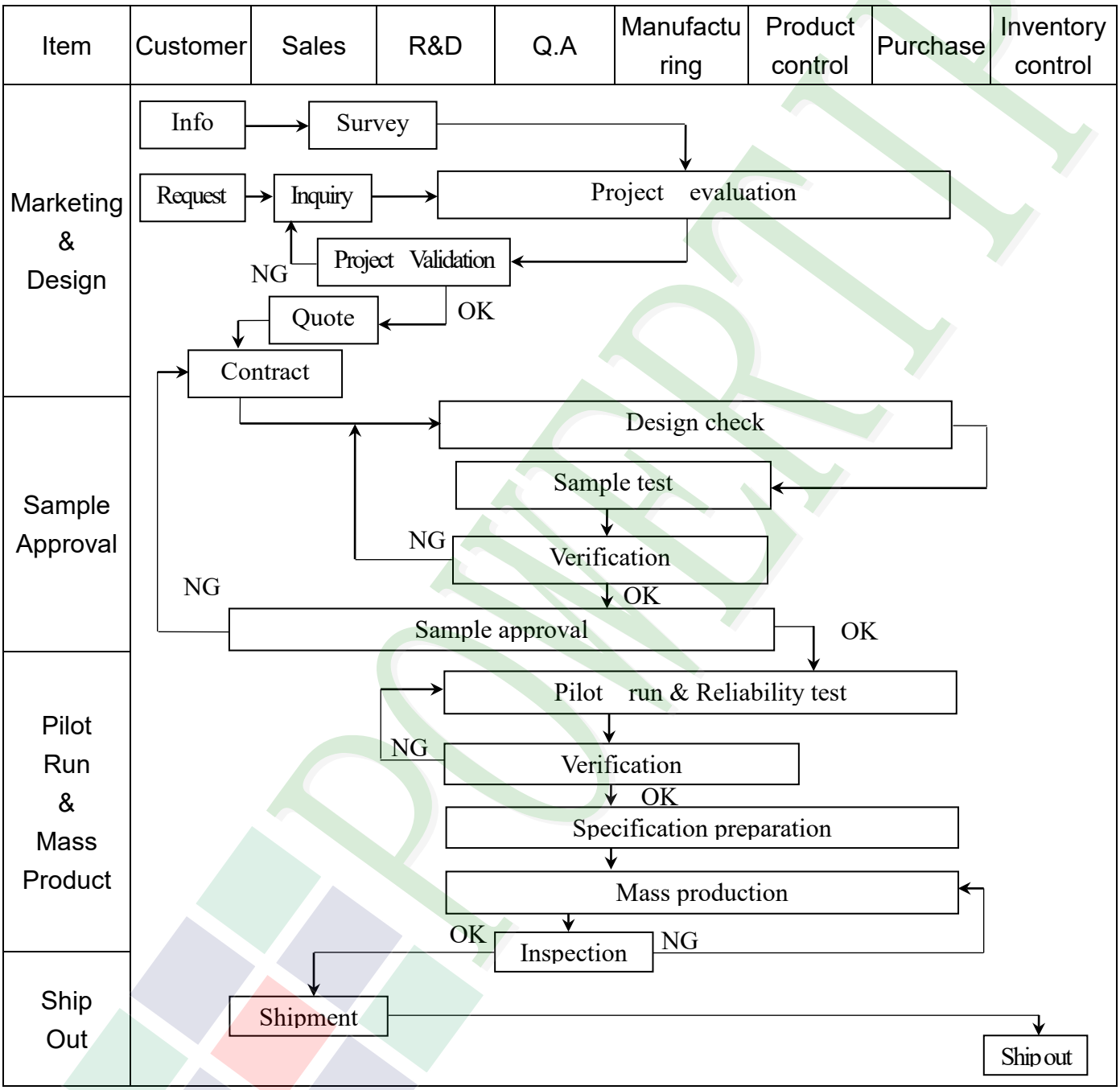

Item	Customer	Sales	R&D	Q.A	Manufacturing	Product control	Purchase	Inventory control
Sales Service	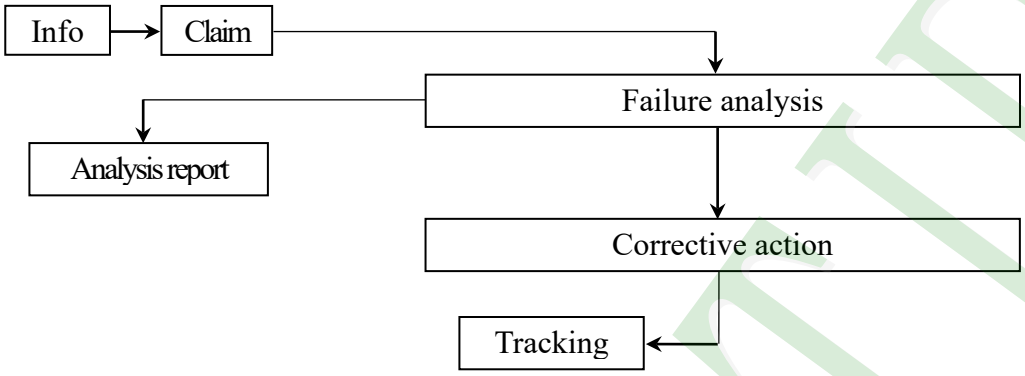							
Q.A Activity	1. ISO 9001 Maintenance Activities 2. Process improvement proposal 3. Equipment calibration 4. Education And Training Activities 5. Standardization Management							

3.2. Inspection Specification

◆Scope: The document shall be applied to TFT-LCD Module for 3.5” -15″ (Ver.B01).

◆Inspection Standard: MIL-STD-105E Table Normal Inspection Single Sampling Level II.

◆Equipment: Gauge, MIL-STD, Powertip Tester, Sample

◆Defect Level: Major Defect AQL: 0.4; Minor Defect AQL: 1.5

◆OUT Going Defect Level: Sampling.

◆Standard of the product appearance test:

a. Manner of appearance test:

(1). The test best be under 20W×2 fluorescent light(about 300lux ～500lux)

, and distance of view must be at 30~40 cm.

(2). The test direction is base on about around 45° of vertical line.

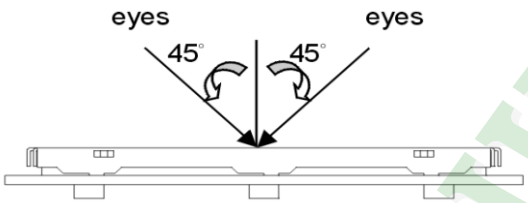

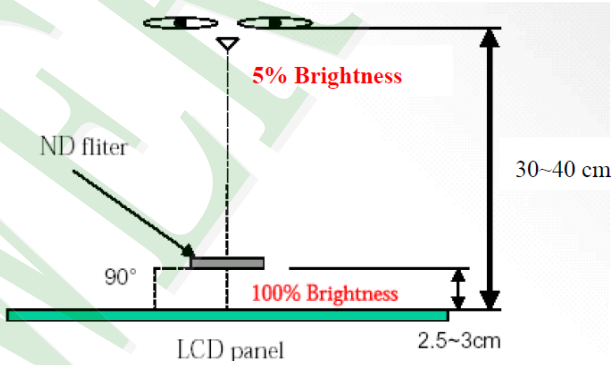

(3). Definition of area.

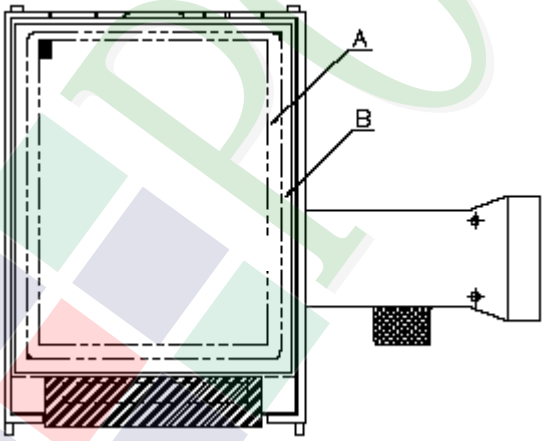

A area: viewing area

B area: Outside of viewing area

(4). Standard of inspection： (Unit：mm)

◆Specification For TFT-LCD Module 3.5” ~15” : (Ver.B01)

<table>
<tr><th>NO</th><th>Item</th><th>Criterion</th><th>Level</th></tr>
<tr><td rowspan="3">01</td><td rowspan="3">Product condition</td><td>1.1 The part number is inconsistent with work order of production.</td><td>Major</td></tr>
<tr><td>1.2 Mixed product types.</td><td>Major</td></tr>
<tr><td>1.3 Assembled in inverse direction.</td><td>Major</td></tr>
<tr><td>02</td><td>Quantity</td><td>2.1 The quantity is inconsistent with work order of production.</td><td>Major</td></tr>
<tr><td>03</td><td>Outline dimension</td><td>3.1 Product dimension and structure must conform to structure diagram.</td><td>Major</td></tr>
<tr><td rowspan="6">04</td><td rowspan="6">Electrical Testing</td><td>4.1 Missing line character and icon.</td><td>Major</td></tr>
<tr><td>4.2 No function or no display.</td><td>Major</td></tr>
<tr><td>4.3 Display malfunction.</td><td>Major</td></tr>
<tr><td>4.4 LCD viewing angle defect.</td><td>Major</td></tr>
<tr><td>4.5 Current consumption exceeds product specifications.</td><td>Major</td></tr>
<tr><td>4.6 Mura cannot be seen through 5% ND filter at 50% Gray, should be judged by the viewing angle of 90 degree.</td><td>Minor</td></tr>
<tr><td>05</td><td>Dot defect

(Bright dot, Dark dot)

On -display</td><td>
<table>
<tr><th colspan="2">Item</th><th>Acceptance (Q’ty)</th></tr>
<tr><td rowspan="4">Dot Defect</td><td>Bright Dot</td><td>≦ 4</td></tr>
<tr><td>Dark Dot</td><td>≦ 5</td></tr>
<tr><td>Joint Dot</td><td>≦ 3</td></tr>
<tr><td>Total</td><td>≦ 7</td></tr>
</table>
5.1 Inspection pattern: full white, full black, Red, Green and blue screens.
5.2 It is defined as dot defect if defect area ＞1/2 dot.
5.3 The distance between two dot defect ≧5 mm.
5.4 Bright dot that can not be seen through 5% ND filter.
</td><td>Minor</td></tr>
</table>

◆Specification For TFT-LCD Module 3.5″ ~15″ : (Ver.B01)

<table>
<tr><th>NO</th><th>Item</th><th>Criterion</th><th>Level</th></tr>
<tr><td>06</td><td>Black or white Dot, scratch, contamination

Round type
 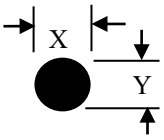

Φ＝(x＋y) / 2

Line type
 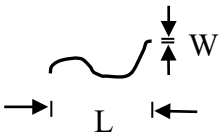
</td><td>6.1 Round type (Non-display or display):
<table><tr><th rowspan="2">Dimension (diameter：Φ)</th><th colspan="2">Acceptance (Q’ty)</th></tr><tr><th>A area</th><th>B area</th></tr><tr><td>Φ ≦ 0.25</td><td>Ignore</td><td rowspan="4">Ignore</td></tr><tr><td>0.25 ＜ Φ ≦ 0.50</td><td>5</td></tr><tr><td>Φ ＞ 0.50</td><td>0</td></tr><tr><td>Total</td><td>5</td></tr></table>
6.2 Line type(Non-display or display):
<table><tr><th rowspan="2">module size</th><th rowspan="2">Length (L)</th><th rowspan="2">Width (W)</th><th colspan="2">Acceptance (Q’ty)</th></tr><tr><th>A area</th><th>B area</th></tr><tr><td rowspan="5">3.5” to less 9”</td><td>---</td><td>W ≦ 0.03</td><td>Ignore</td><td rowspan="5">Ignore</td></tr><tr><td>L ≦10.0</td><td>0.03 ＜W ≦ 0.05</td><td>4</td></tr><tr><td>L ≦5.0</td><td>0.05 ＜W ≦ 0.10</td><td>2</td></tr><tr><td>---</td><td>W ＞0.10</td><td>As round type</td></tr><tr><td colspan="2">Total</td><td>5</td></tr><tr><td rowspan="5">9” to 15”</td><td>---</td><td>W ≦ 0.05</td><td>Ignore</td><td rowspan="5">Ignore</td></tr><tr><td>L ≦10.0</td><td>0.05 ＜W ≦ 0.10</td><td>5</td></tr><tr><td>---</td><td>W ＞0.10</td><td>As round type</td></tr><tr><td colspan="2">Total</td><td>5</td></tr></table></td><td>Minor</td></tr>
<tr><td>07</td><td>Polarizer Bubble</td><td><table><tr><th rowspan="2">Dimension (diameter: Φ)</th><th colspan="2">Acceptance (Q’ty)</th></tr><tr><th>A area</th><th>B area</th></tr><tr><td>Φ ≦ 0.25</td><td>Ignore</td><td rowspan="5">Ignore</td></tr><tr><td>0.25 ＜ Φ ≦ 0.50</td><td>4</td></tr><tr><td>0.50 ＜ Φ ≦ 0.80</td><td>1</td></tr><tr><td>Φ ＞0.80</td><td>0</td></tr><tr><td>Total</td><td>5</td></tr></table></td><td>Minor</td></tr>
</table>

◆Specification For TFT-LCD Module 3.5″ ~15″：

(Ver.B01)

NO	Item	Criterion	Level
08	The crack of glass	**Symbols：** X: The length of crack　　Y: The width of crack. Z: The thickness of crack　　W: terminal length t: The thickness of glass　　a: LCD side length 8.1 General glass chip: 8.1.1 Chip on panel surface and crack between panels: 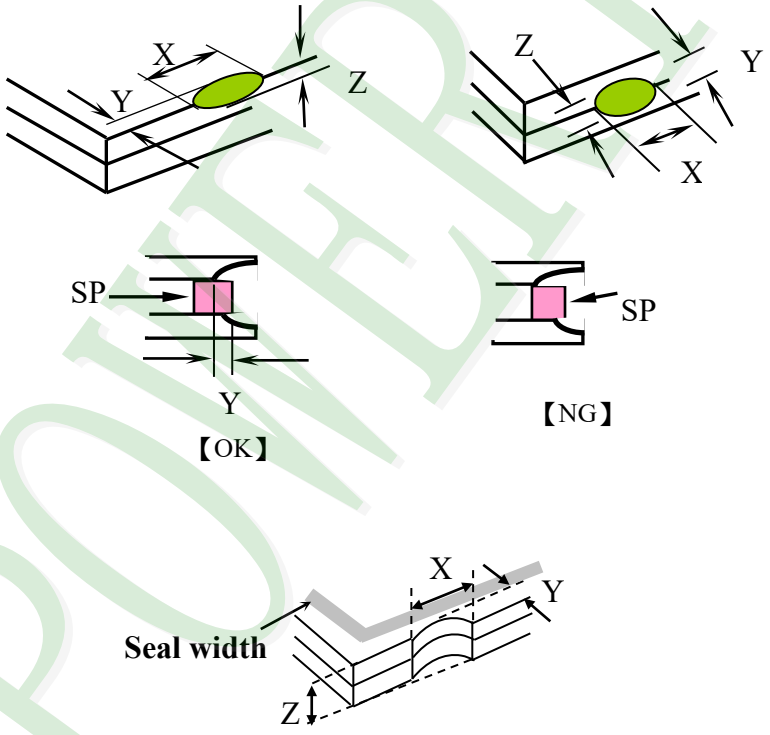 X: ≦ a; Y: Crack can't enter viewing area; Z: ≦1/2 t X: ≦ a; Y: Crack can't exceed the half of SP width.; Z: 1/2 t < Z ≦2 t	Minor

◆Specification For TFT-LCD Module 3.5″ ~15″：

(Ver.B01)

NO	Item	Criterion	Level
08	The crack of glass	Symbols： X: The length of crack　Y: The width of crack. Z: The thickness of crack　W: terminal length t: The thickness of glass　a: LCD side length 8.1.2 Corner crack: 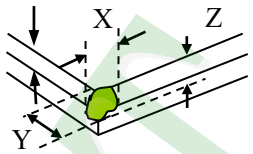 X: ≦1/5 a; Y: Crack can't enter viewing area; Z: Z ≦ 1/2 t X: ≦1/5 a; Y: Crack can't exceed the half of SP width.; Z: 1/2 t < Z ≦ 2 t 8.2 Protrusion over terminal: 8.2.1 Chip on electrode pad: 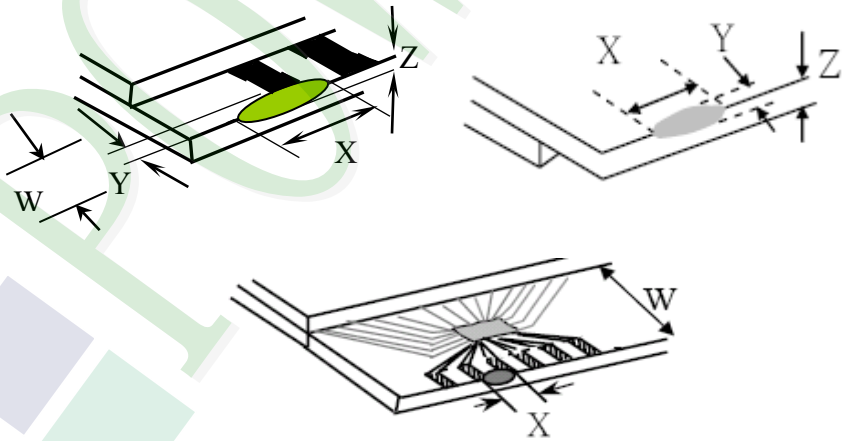 Front: X ≦ a; Y ≦ 1/2 W; Z ≦ t Back: X ≦ a; Y ≦ W; Z ≦ 1/2 t	Minor

◆Specification For TFT-LCD Module 3.5″ ~15″ : (Ver.B01)

NO	Item	Criterion	Level
08	The crack of glass	**Symbols:** X: The length of crack Y: The width of crack. Z: The thickness of crack W: terminal length t: The thickness of glass a: LCD side length 8.2.2 Non-conductive portion: 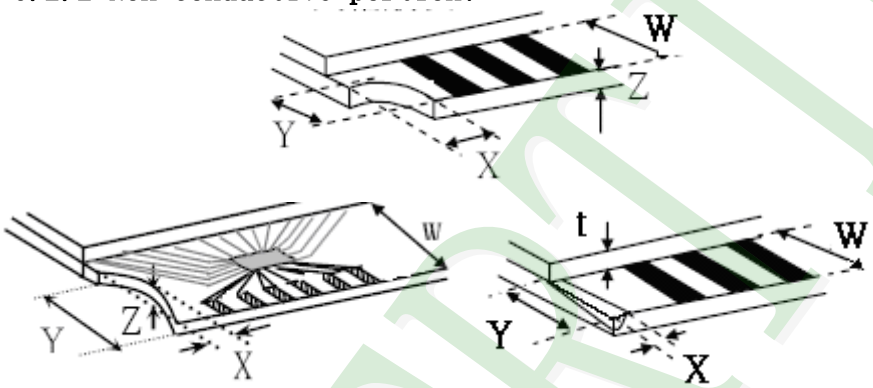 X: ≦ 1/3 a; Y: ≦ W; Z: ≦t ⊙ If the chipped area touches the ITO terminal, over 2/3 of 1. the ITO must remain and be inspected according to electrode terminal specifications. 8.2.3 Glass remain: 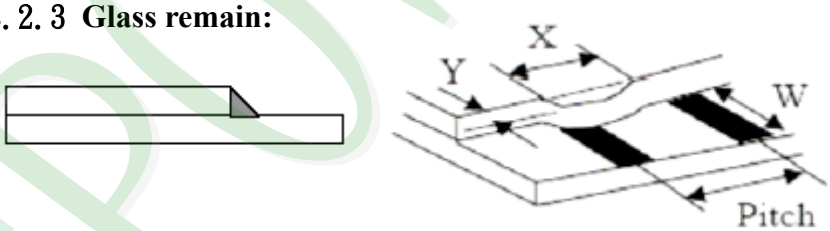 X: ≦ a; Y: ≦ 1/3 W; Z: ≦t 8.2.4 Cracking: 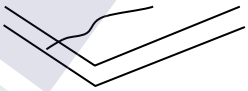 Not Allowed	Minor

◆Specification For TFT-LCD Module 3.5″ ~15″：

(Ver.B01)

NO	Item	Criterion	Level
09	Backlight elements	9.1 Backlight can't work normally.	Major
		9.2 Backlight doesn't light or color is wrong.	Major
		9.3 Illumination source flickers when lit.	Major
10	General appearance	10.1Pin type、quantity、dimension must match type in structure diagram.	Major
		10.2 No short circuits in components on PCB or FPC.	Major
		10.3 Parts on PCB or FPC must be: no wrong parts, missing parts or excess parts.	Major
		10.4 Product packaging must the same as specified on packaging specification sheet.	Minor
		10.5 The folding and peeled off in polarizer are not acceptable.	Minor
		10.6 The PCB or FPC between B/L assembled distance(PCB or FPC) is ≦1.5 mm.	Minor

4. RELIABILITY TEST

4.1 Reliability Test Condition (Ver.B01)

NO.	TEST ITEM	TEST CONDITION
1	High Temperature Storage Test	Keep in 80 ±5℃ 240 hrs
2	Low Temperature Storage Test	Keep in -30 ±5℃ 240 hrs
3	High Temperature / High Humidity Storage Test	Keep in 60 ℃ / 90% R.H duration for 240 hrs (Excluding the polarizer)
4	Temperature Cycling Storage Test	-30℃ → +25℃ → 80℃ → +25℃ (30mins) (5mins) (30mins) (5mins) 20 Cycle
5	ESD Test	Air Discharge: Apply 2 KV with 5 times Discharge for each polarity +/- Contact Discharge: Apply 250 V with 5 times discharge for each polarity +/- 1. Temperature ambiance : 15℃～35℃ 2. Humidity relative : 30%～60% 3. Energy Storage Capacitance(Cs+Cd) : 150pF±10% 4. Discharge Resistance(Rd) : 330Ω±10% 5. Discharge, mode of operation : Single Discharge (time between successive discharges at least 1 sec) (Tolerance if the output voltage indication : ±5%)
6	Vibration Test (Packaged)	1. Sine wave 10～55 Hz frequency (1 min/sweep) 2. The amplitude of vibration :1.5 mm 3. Each direction (X、Y、Z) duration for 2 Hrs
7	Drop Test (Packaged)	Packing Weight (Kg) / Drop Height (cm) 0 ~ 45.4 / 122 45.4 ~ 90.8 / 76 90.8 ~ 454 / 61 Over 454 / 46 Drop Direction :※1 corner / 3 edges / 6 sides each 1time

◎Result Evaluation Criteria :

Under the display quality test conditions with normal operations with normal operation state. Do not change these conditions as such changes may affect practical display function.

(Normal operation state)

Temperature：+20~30℃

Humidity：50~70%

Atmospheric pressure：86~106Kpa

5. PRECAUTION RELATING PRODUCT HANDLING

5.1 SAFETY

5.1.1 If the LCD panel breaks, be careful not to get the liquid crystal to touch your skin.

5.1.2 If the liquid crystal touches your skin or clothes, please wash it off immediately by using soap and water.

5.2 HANDLING

5.2.1 Avoid any strong mechanical shock which can break the glass.

5.2.2 Avoid static electricity which can damage the CMOS LSI－When working with the module, be sure to ground your body and any electrical equipment you may be using.

5.2.3 Do not remove the panel or frame from the module.

5.2.4 The polarizing plate of the display is very fragile. So, please handle it very carefully, do not touch, push or rub the exposed polarizing with anything harder than an HB pencil lead (glass, tweezers, etc.)

5.2.5 Do not wipe the polarizing plate with a dry cloth, as it may easily scratch the surface of plate.

5.2.6 Do not touch the display area with bare hands, this will stain the display area.

5.2.7 Do not use ketonic solvent & aromatic solvent. Use with a soft cloth soaked with a cleaning naphtha solvent.

5.2.8 To control temperature and time of soldering is 320 ± 10℃ and 3 ~ 5 sec.

5.2.9 To avoid liquid (include organic solvent) stained on LCM.

5.2.10 Caution! (LCM products with Capacitive Touch Panel)
Strong EMI-sources such as switch-mode power supplies (SPS) can lead to touch malfunction (e.g., ghost-touches). Therefore, the touch needs to be thoroughly tested inside the target application.

5.2.11 CAUTION: Continuously displaying same static image will result in high possibility of image sticking/image burn-in effect due to TFT panel characteristic.

5.2.12 Double-sided tape designed to be attached with the customer's mechanical device, please follow up the rules and regulations published by the original manufacturer of double-side tape for the attachment operation.

5.3 STORAGE

5.3.1 Store the panel or module in a dark place where the temperature is 25℃ ± 5℃ and the humidity is below 65% RH.

5.3.2 Do not place the module near organics solvents or corrosive gases.

5.3.3 Do not crush, shake, or jolt the module.

5.4 TERMS OF WARRANTY

5.4.1 Applicable warrant period
The period is within thirteen months since the date of shipping out under normal using and storage conditions.

5.4.2 Unaccepted responsibility
This product has been manufactured to your company's specification as a part for use in your company's general electronic products. It is guaranteed to perform according to delivery specifications. For any other use apart from general electronic equipment, we cannot take responsibility if the product is used in nuclear power control equipment, aerospace equipment, fire and security systems or any other applications in which there is a direct risk to human life and where extremely high levels of reliability are required.

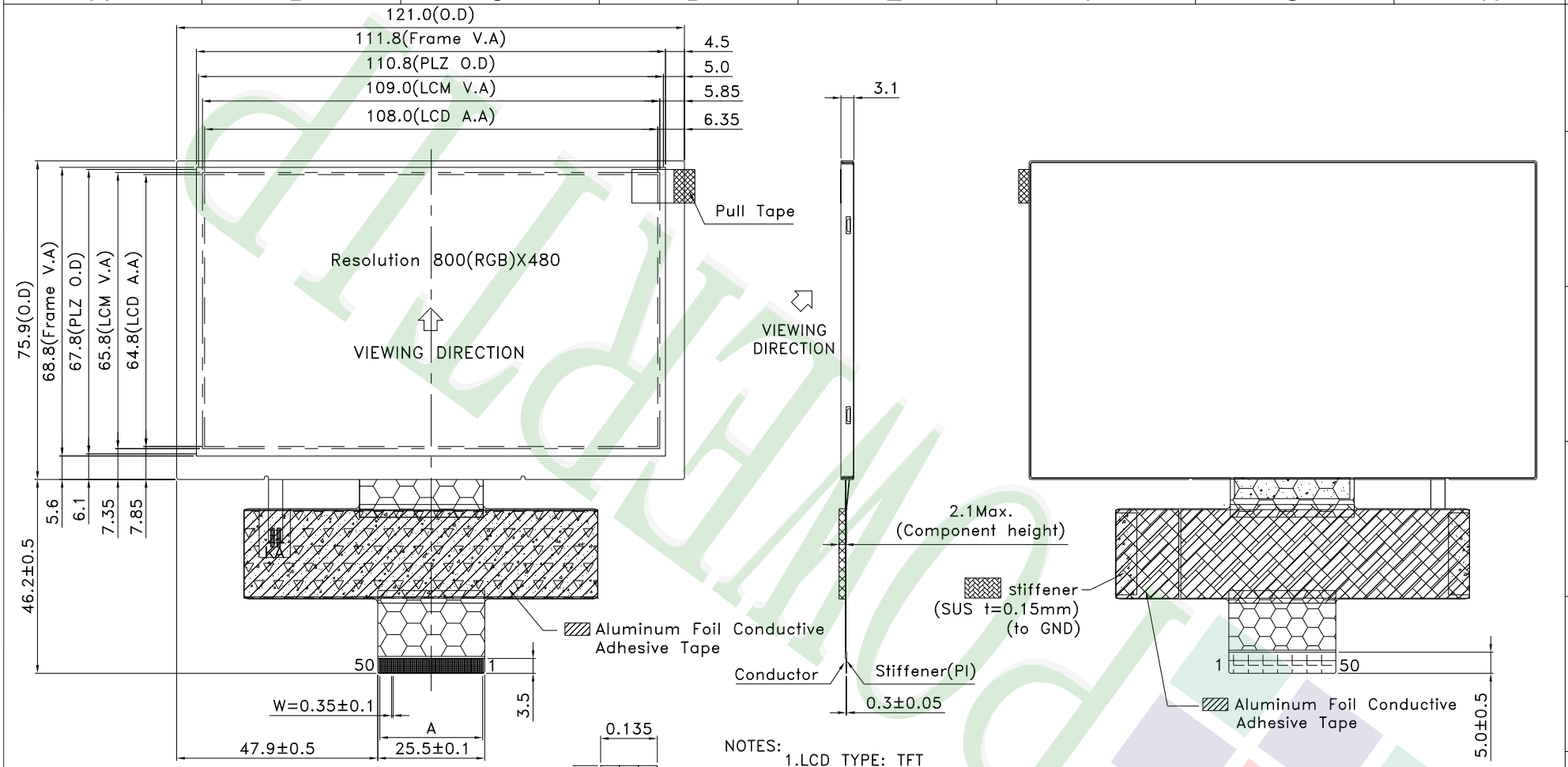

NOTES:

1. LCD TYPE: TFT
2. LCD DISPLAY: POSITIVE/TRANSMISSIVE
3. VIEW DIRECTION: 6 O'CLOCK
4. The tolerance unless classified ±0.3mm
5. Component area & Unbending area, Kaptan tape, EMI Film.
6. A: PITCH 0.5X49=24.5±0.1
7. FPC suggested connector : FH12A-50S-0.5SH (Hirose) or Compatible.

REV	REV BY	REVISER	DATE
007			
006			
005			
004			
003			
002			
001	NEW DRAWING	Kevin Lin	2020/04/08

PART NO: PH800480T33-IHA

DRAWING NAME : LMD-PH800480T33-IHA

TITLE: LCD MODULE DRAWING

久正光電股份有限公司
POWERTIP TECHNOLOGY CORPORATION

Design	Kevin Lin	(3)	Surface		
Check	Clare	Unit	MM	Material	
Approve	Rex	Scale	FIT	Thickness	
		Page	1/1	Quantity	

Length(Min) (mm) \ Tolerance / Precision	Precision Level
1 ~ 4	-
4 ~ 16	-
16 ~ 63	-
63 ~ 250	-
250 ~ 1000	-

PT-A-054-01

Ver.003	
Documents NO.	PKG-PH800480T033-IHA

LCM包裝規格書
LCM Packaging Specifications
(For Tray)

Approve	Check	Contact
Bright	Clare	Tina

1.包裝材料規格表 (Packaging Material) : (per carton)

No.	Item	Model	Dimensions (mm)	1Pcs Weight	Quantity	Total Weight
1	成品 (LCM)	PH800480T033-IHA	121.0 X 75.9	0.059	2880	169.92
2	多層薄膜(1)POF	OTFILM0BA03ABA	19"X350X0.015	——	120	——
3	舒美墊(3) EPE	FOAM000000180	130.0 X 90.0 X 1	0.0002	2880	0.576
4	TRAY 盤 (2)Tray	TYSG000000187	352 X 260 X 12.8	0.0965	840	81.06
5	舒美墊(4) EPE	FOAM000000047	350 X 255 X 5	0.011	120	1.32
6	內盒(5)Product Box	BX36627063ABBA	383 X 270 X 66	0.182	120	21.84
7	保利龍板(6)Polylon board	OTPLB00PL08ABA	550 X 393 X 20	0.0284	40	1.136
8	外紙箱(7)Carton	BX57041027CCBA	570 X 410 X 265	1.0	20	20.0
9	棧板(8)PALLET △3	OTPALLET00008	1300 X 1100 X 150	14.5	1	14.5

2.總重量 (Total Weight) : △3 310.35 Kg±10%

3.單箱數量規格表 (Packaging Specifications and Quantity) :

(1)LCM quantity per box : no per tray	4	x no of tray	6	=	24
(2)Total LCM quantity in carton : quantity per box	24	x no of boxes	6	=	144
(3)Total LCM quantity in pallet : quantity per carton	144	x no. of cartons	20	=	2880

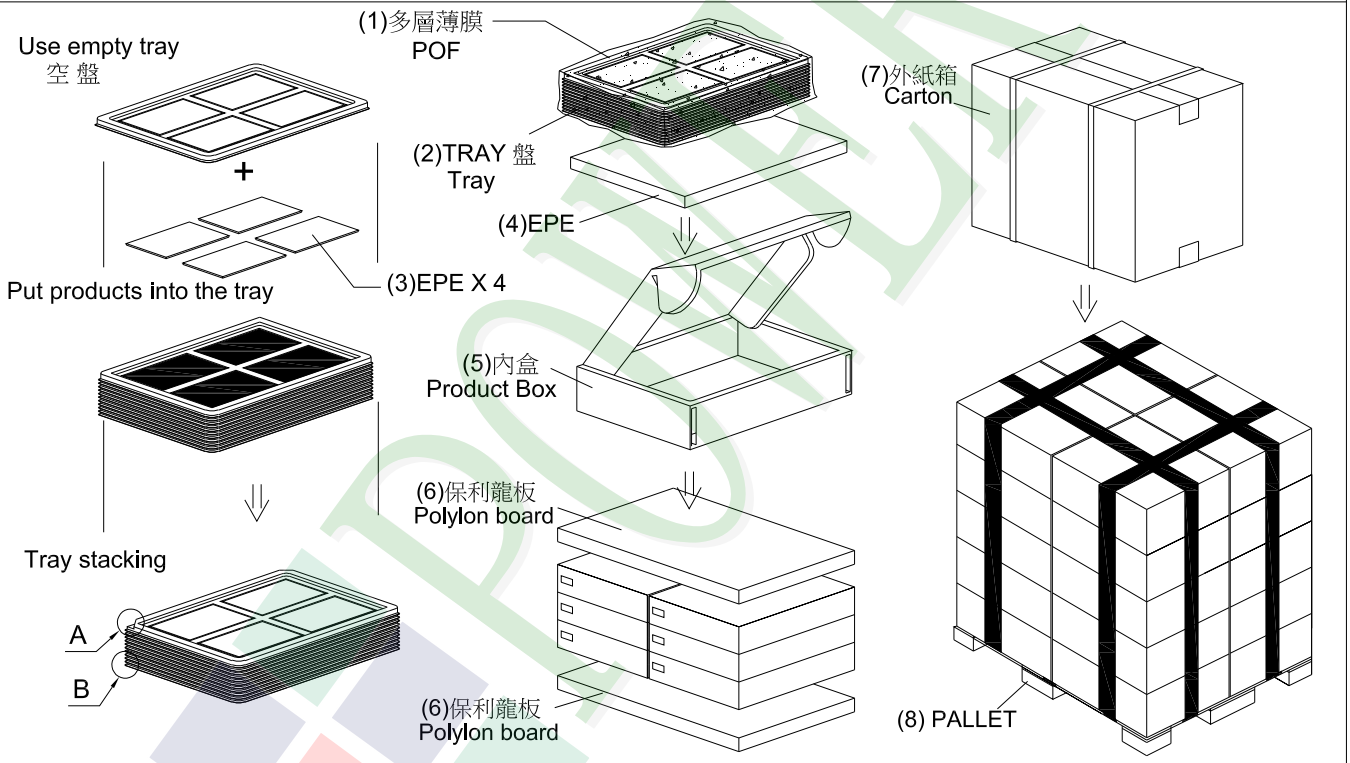

特 記 事 項 (REMARK)

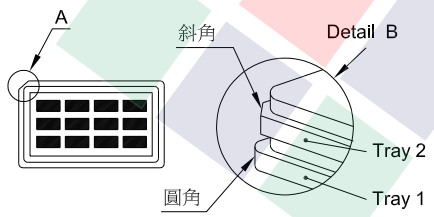

4.TRAY盤相疊時,需旋轉180度,請詳見B視圖
Rotate tray 180 degrees and place on top of stack.
Check the tray stack using Fig. B.

5.外購Tray:TY00000000308
自製Tray:TYSG000000187

POWERTIP TECH. CORP.