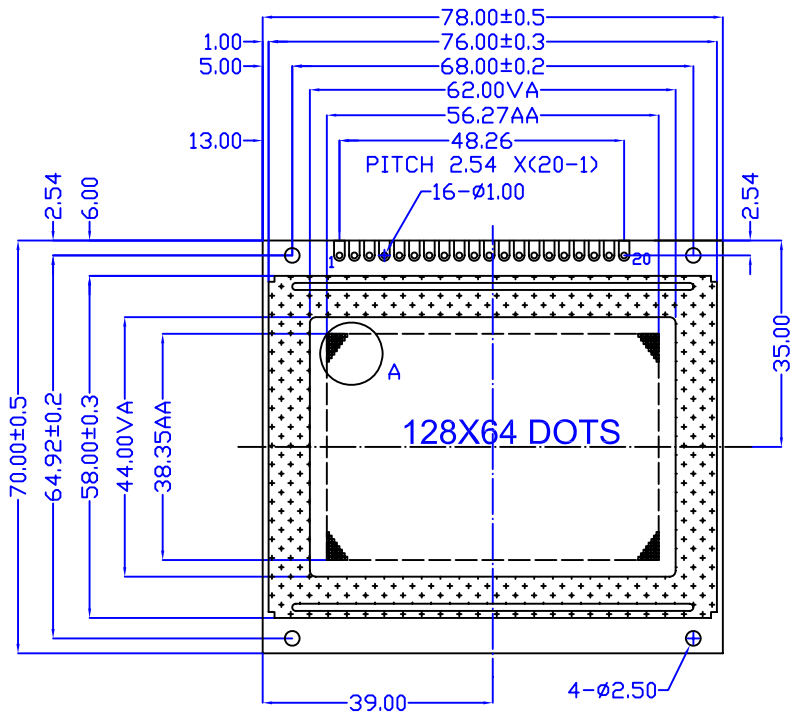

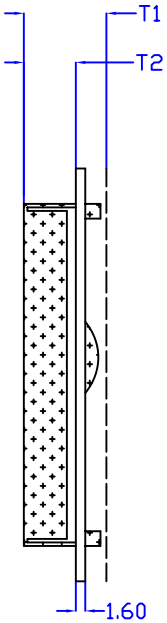

* FOR LED BACKLIGHT
T1=14.0MAX T2=9.0±0.3
* FOR EL OR NO BACKLIGHT
T1=11.0MAX T2=6.0±0.3

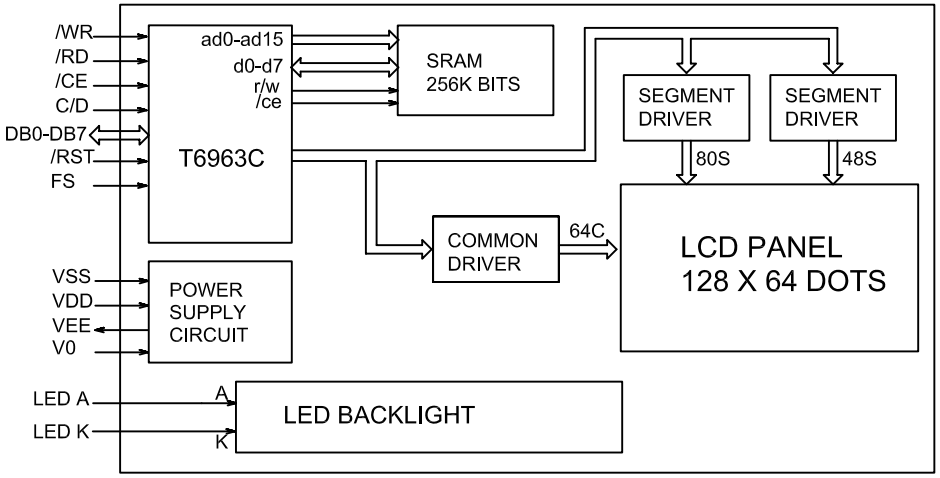

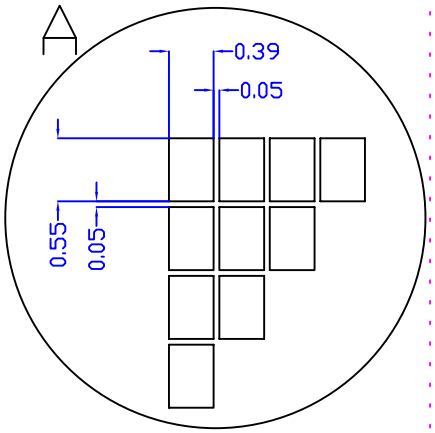

REVISIONS

NO.	DATE	BY	DESCRIPTION
1	04/10/28	A.CH	NEW RELEASE

PINS ASSIGNMENT

NO.	SYSBOL	DESCRIPTION
1	FG/VEE	FRAMEGROUND/NEGATIVE VOLTAGE
2	VSS	GROUND
3	VDD	POWER SUPPLY
4	V0	OPERATING VOLTAGE FOR LCD
5	/WR	WRITE SIGNAL
6	/RD	READ SIGNAL
7	/CE	CHIP ENABLE SIGNAL
8	C/D	COMMAND/DATA SELECTION
9	/RST	RESET SIGNAL
10-17	DB0-DB7	DATA BUS
18	FS	FONT SELECTION(L:8X8, H:6X8)
19	A	POWER SUPPLY FOR LED BACKLIGHT(+)
20	K	POWER SUPPLY FOR LED BACKLIGHT(-)

ABSOLUTE MAXIMUM RATING

ITEM	SYMBOL	MIN	MAX	UNIT
POWER SUPPLY(LOGIC)	VDD-VSS	0	6.5	V
POWER SUPPLY(LCD DRV.)	VDD-V0	0	18.0	V
INPUT VOLTAGE	Vi	Vi	VDD	V

ELECTRICAL CHARACTERISTICS

ITEM		SYMBOL	MIN	TYP	MAX	UNIT
VOLTAGE FOR LOGIC		VDD-VSS	4.75	5.0	5.25	V
SUPPLY CURRENT		IDD	-	5.1	9.8	mA
LCD OPERATING VOLTAGE	0C	VDD-V0	-	9.7	-	V
	25C		-	9.5	-	V
	40C		-	8.3	-	V
INPUT VOLTAGE	H	VIH	0.7VDD	-	VDD	V
	L	VIL	0		0.3VDD	V

MECHANICAL SPECIFICATIONS

ITEM	SPECIFICATION	UNIT
OVERALL SIZE	78.0W x 70.0H x 14.0T(11.0T)	MM
VIEWING AREA	62.0W x 44.0H	MM
DOT NUMBER	128 x 64	DOTS
DOT SIZE	0.39W x 0.55H	MM
DOT PITCH	0.44W x 0.60H	MM

OPTIONS

1. LCD TYPE: Y/G STN; GRAY STN; B/W FSTN
2. BACKLIGHT: WITHOUT BACKLIGHT; LED; EL
3. COLOR OF BACKLIGHT: Y/G; BLUE; WHITE
4. TEMPERATURE RANGE: NORMAL(0--50C);
   EXTENDED(-20--70C)
5. POWER SUPPLY: ON BOARD DC/DC(SINGLE 5.0V);
   DUAL POWER SUPPLY(5.0V & -5.0V)
6. VIEWING ANGLE: 6H; 12H

NT-G1286411A

128 X 64 DOTS GRAPHIC LCM

NELY

ALL DIMENSIONS ARE IN MM. TOLERANCE IS +/-0.2
UNLESS OTHERWISE NOTED.

NELY TECH CO.,LTD. WWW.NELYTECH.COM