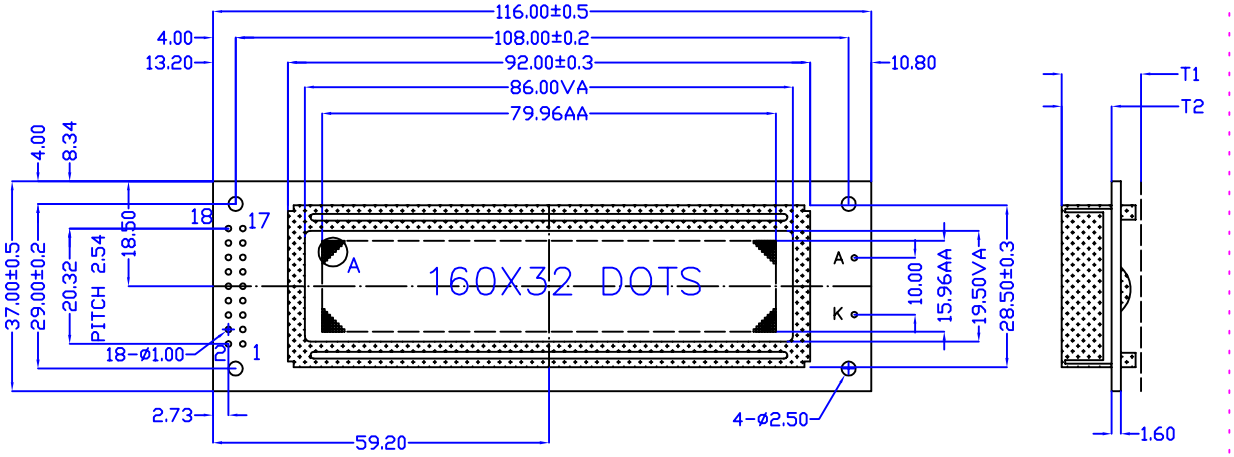

* FOR LED BACKLIGHT
T1=14.0MAX T2=9.0±0.3
* FOR EL OR NO BACKLIGHT
T1=10.0MAX T2=5.0±0.3

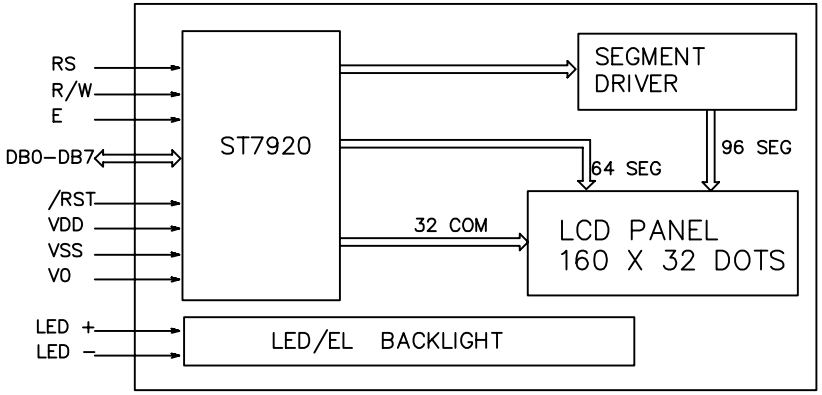

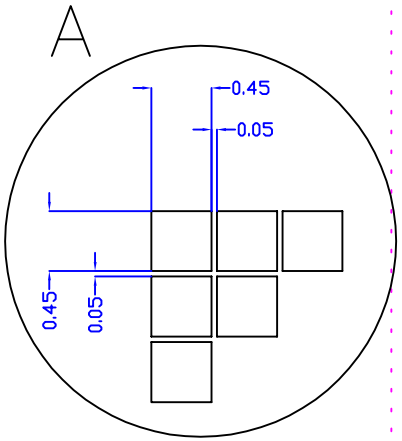

REVISIONS

NO.	DATE	BY	DESCRIPTION
1	03/05/22	A.CH	NEW RELEASE

PINS ASSIGNMENT

NO.	SYSBOL	DESCRIPTION
1	VSS	POWER SUPPLY
2	VDD	POWER SUPPLY
3	V0	OPERATING VOLTAGE FOR LCD
4	RS	DATA/INSTRUCTION SELECT
5	R/W	READ/WRITE CONTROL
6	E	ENABLE SIGNAL
7--14	DB0--DB7	DATA BUS
15	/RST	RESET SIGNAL
16	NC	NO CONNECT
17	LED +	POWER SUPPLY FOR LED BACKLIGHT (+)
18	LED -	POWER SUPPLY FOR LED BACKLIGHT (-)

ABSOLUTE MAXIMUM RATING

ITEM	SYMBOL	MIN	MAX	UNIT
POWER SUPPLY(LOGIC)	VDD-VSS	-0.3	5.5	V
POWER SUPPLY(LCD DRV.)	VLCD	-0.3	7.0	V
INPUT VOLTAGE	Vi	-0.3	VDD	V

ELECTRICAL CHARACTERISTICS (VDD=5.0±0.25V, 25C)

ITEM		SYMBOL	MIN	TYP	MAX	UNIT
VOLTAGE FOR LOGIC		VDD-VSS	4.75	5.0	5.25	V
SUPPLY CURRENT		IDD	-	0.6	0.8	mA
VOLTAGE FOR LCD		V0-VSS	2.8	3.0	3.2	V
INPUT VOLTAGE	H	ViH	2.2	-	VDD	V
	L	ViL	-0.3	-	0.6	V
OUTPUT VOLTAGE	H	VoH	2.4	-	-	V
	L	VoL	-	-	0.4	V

MECHANICAL SPECIFICATIONS

ITEM	SPECIFICATION	UNIT
OVERALL SIZE	116.0W x 37.0H x 14.0T(10.0T)	MM
VIEWING AREA	83.0W x 18.6H	MM
DOTS	160 X 32	
DOT SIZE	0.45W x 0.45H	MM
DOT PITCH	0.50W x 0.50H	MM

OPTIONS

1. LCD TYPE: Y/G STN; GRAY STN;
2. BACKLIGHT: WITHOUT BACKLIGHT; LED; EL
3. COLOR OF BACKLIGHT: Y/G; BLUE; WHITE
4. TEMPERATURE RANGE: NORMAL(0--50C)
   EXTENDED(-20--70C)
5. POWER SUPPLY: 5.0V; 3.0V
6. VIEWING ANGLE: 6H; 12H
7. CHARACTER TABLE: CHINESE FONTS(GB2312)

NT-G160321A

160 X 32 DOTS GRAPHICS LCM

NELY

ALL DIMENSIONS ARE IN MM. TOLERANCE IS +/-0.2
UNLESS OTHERWISE NOTED.

NELY TECH CO.,LTD. WWW.NELYTECH.COM

NELY, YOUR SUPPLIER, AND YOUR PARTNER!