POWERTIP TECH. CORP.

SPECIFICATIONS

CUSTOMER	:	CIT008
SAMPLE CODE	:	SE128128WRF-005-HQ
MASS PRODUCTION CODE	:	PE128128WRF-005-HQ
SAMPLE VERSION	:	01
SPECIFICATIONS EDITION	:	006
DRAWING NO. (Ver.)	:	LMD-PE128128WRF-005-HQ (Ver.001)
PACKAGING NO. (Ver.)	:	PKG- PE128128WRF-005-HQ (Ver.002)

Customer Approved

Date:

Approved	Checked	Designer
廖志豪 Rex Liao	張慶源 Yuan Chang	林榮鍾 Timter Lin

POWERTIP
2010.10.18
TW RD APR

☐ Preliminary specification for design input

■ Specification for sample approval

POWERTIP TECH. CORP.

Headquarters:

No.8, 6th Road, Taichung Industrial Park,
Taichung, Taiwan
台中市 407 工業區六路 8 號

TEL: 886-4-2355-8168
FAX: 886-4-2355-8166

E-mail: sales@powertip.com.tw
Http://www.powertip.com.tw

History of Version

Date (mm / dd / yyyy)	Ver.	Edi.	Description	Page	Design by
02/22/2008	01	001	New drawing	—	Timter
03/27/2008	01	002	Modify pin Assignment	P.15	Timter
05/07/2008	01	003	Modify DC Electrical Characteristics Modify Optical Characteristics Modify Backlight Characteristics	P.5 P.6 P.11	Timter
08/13/2009	01	004	First Sample	—	Timter
10/05/2009	01	005	Modify 1.3 Absolute Maximum Ratings Modify 1.5 Optical Characteristics Modify 1.6 Backlight Characteristics Modify 2.4 Reference Power supply circuit Modify Packing Specification	P.4 P.6 P.11 P.17 Appendix	Timter
10/18/2010	01	006	Modify 1.1 Features (ROHS Web) Modify 1.6 Backlight Characteristics (Maximum Ratings, IF)	P.4 P.11	Timter

Total：27

Contents

1. SPECIFICATIONS
   - 1.1 Features
   - 1.2 Mechanical Specifications
   - 1.3 Absolute Maximum Ratings
   - 1.4 DC Electrical Characteristics
   - 1.5 Optical Characteristics
   - 1.6 Backlight Characteristics
2. MODULE STRUCTURE
   - 2.1 Counter Drawing
   - 2.2 Interface Pin Description
   - 2.3 Timing Characteristics
   - 2.4 Reference Power supply circuit
3. QUALITY ASSURANCE SYSTEM
   - 3.1 Quality Assurance Flow Chart
   - 3.2 Inspection Specification
4. RELIABILITY TEST
   - 4.1 Reliability Test Condition
5. PRECAUTION RELATING PRODUCT HANDLING
   - 5.1 Safety
   - 5.2 Handling
   - 5.3 Storage
   - 5.4 Terms of Warranty

Appendix: 1. LCM Drawing
2. Packing Specification

Note: For detailed information please refer to IC data sheet: NOVATEK—NT7508

1. SPECIFICATIONS

1.1 Features

Item	Standard Value
Display Type	128 * 128 Dots
LCD Type	FSTN, Positive, Transflective
Driver Condition	LCD Module：1/128 Duty, 1/9 Bias,
Viewing Direction	6 O'clock
Backlight	LED
Weight	65 g
Interface	Parallel
Other (controller / driver IC)	NOVATEK – NT7508
ROHS	THIS PRODUCT CONFORMS THE ROHS OF PTC Detail information please refer web side： http://www.powertip.com.tw/news.php?area_id_view=1085560481/

1.2 Mechanical Specifications

Item	Standard Value	Unit
Outline Dimension	75.0 (W) * 85.0(L) * 6.0 (H)	mm
Viewing Area	69.0 (W) * 69.0 (L)	mm
Active Area	63.345 (W) * 63.345 (L)	mm
Dot Size	0.48 (W) * 0.48 (H)	mm
Dot Pitch	0.495 (W) * 0.495 (H)	mm

Note：For detailed information please refer to LCM drawing

1.3 Absolute Maximum Ratings

Item	Symbol	Condition	Min.	Max.	Unit
Power Supply Voltage	V_{DD}	—	-0.3	4.0	V
LCD Driver Supply Voltage	V_{LCD}	—	-0.3	15.0	V
Input Voltage	V_{IN}	—	-0.3	V_{dd}+0.3	V
Operating Temperature	T_{OP}	—	-20	70	℃
Storage Temperature	T_{ST}	—	-30	80	℃

Note: Temperature coefficient : -0,05%/℃ and firmware code must use" 0xF1, 0x01".

1.4 DC Electrical Characteristics

Module V_{DD} = 3.0±0.3V, V_{SS} = 0V, Ta = 25°C

Item	Symbol	Condition	Min.	Typ.	Max.	Unit
Logic Supply Voltage	V_{DD}	—	2.7	3.0	3.3	V
Input High Voltage	V_{IH}	—	0.8VDD	—	VDD	V
Input Low Voltage	V_{IL}	—	VSS	—	0.2VDD	V
Output High Voltage	V_{OH}	IOH = -0.5mA	0.8VDD	—	VDD	V
Output Low Voltage	V_{OL}	IOL = -0.5mA	VSS	—	0.2VDD	V
Supply Current	I_{DD}	VDD=3.0 V；VOP=14.5 V Pattern= Full Display	—	2	—	mA
		VDD=3.0 V；VOP=14.5 V Pattern= Character*1	—	2	3	
LCM Driver Voltage	V_{OP} *2	-20℃	14.4	14.6	14.8	V
		25℃	14.3	14.5	14.7	
		70℃	13.8	14.0	14.2	

NOTE：*1 The Maximum current display.

*2 The V_{OP} test point is V0-VSS.

1.5 Optical Characteristics

LCD Panel：Duty=1/128，Bias=1/9，V_{OP}=14.5V，Ta =25℃

Item		Symbol	Conditions	Min.	Typ.	Max.	Unit	Reference
Response Time	Rise	Tr(60℃)	C≥2.0, ∅ = 270°	—	56	84	ms	Note 2
		Tr(25℃)		—	115	173		
		Tr(-10℃)		—	575	863		
	Fall	Tf(60℃)		—	150	225		
		Tf(25℃)		—	310	465		
		Tf(-10℃)		—	2779	4168		
Viewing angle range	Top	ΘY+		—	40	—	Deg.	Note 1
	Bottom	ΘY-		—	40	—		
	Left	ΘX-		—	40	—		
	Right	ΘX+		—	40	—		
Contrast Ratio (With BL)		CR	θ = 0°, ∅ = 270°	3	5	—	—	Note 3
Average Brightness (With BL) *2		IV	IF=2 x 30 mA	40	50	—	cd/m²	—
CIE Color Coordinate (With BL) *2		X		0.28	0.33	0.38	—	—
		Y		0.30	0.35	0.40		
Uniformity *1		△B	—	70	—	—	%	—

Note：

*1：△B=B(min) / B(max) * 100%

*2：Measurement Condition for Optical Characteristics:

a：Environment: 25°℃±5°℃ / 60±20%R.H，no wind，dark room below 10 Lux at typical lamp current and typical operating frequency.

b：Measurement Distance: 500 ± 50 ㎜ ，(θ= 0°)

c：Equipment: TOPCON BM-7 fast，(field 1°)，after 10 minutes operation.

d：The uncertainty of the C.I.E coordinate measurement ±0.01，Average Brightness ± 4%

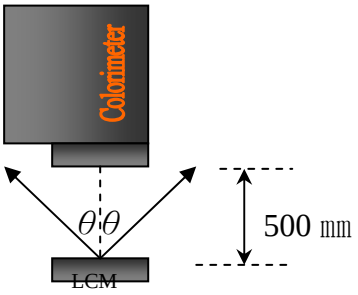

Colorimeter=BM-7 fast

Note 1.

Optical characteristics-2

Viewing angle

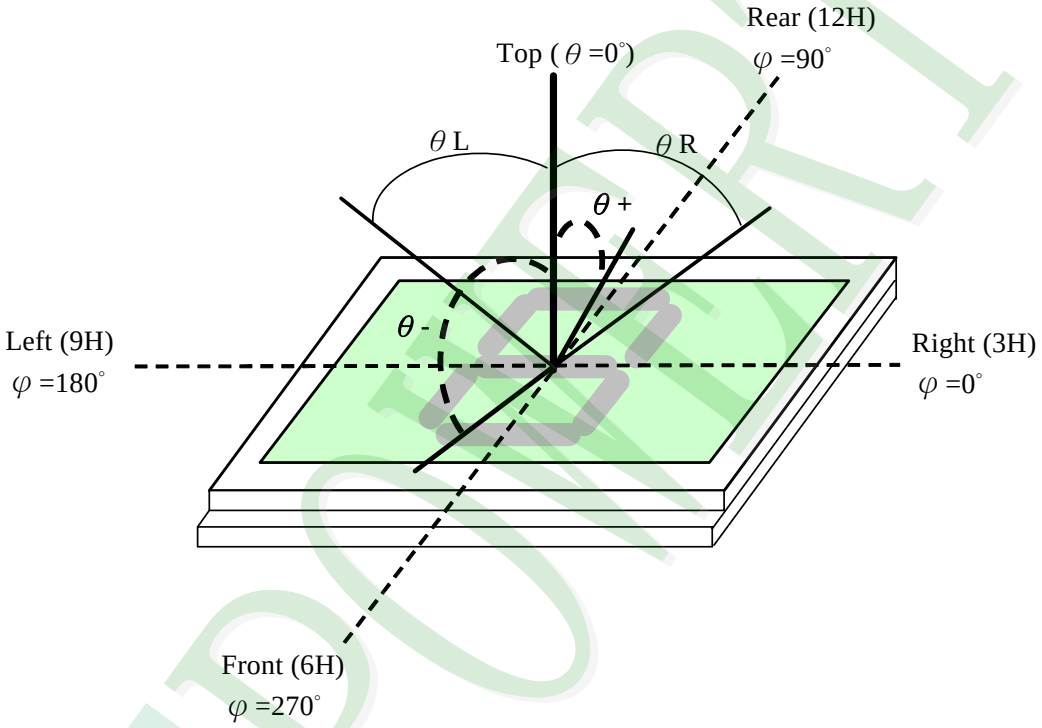

Viewing angle

Note 2.

Optical characteristics-3

Fig.2 Definition of response time

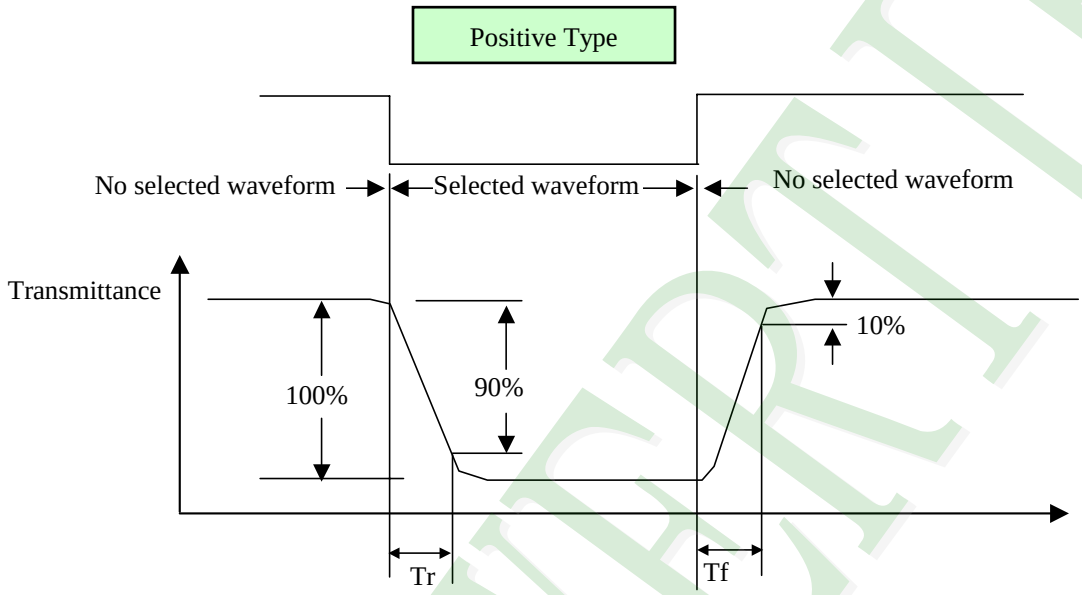

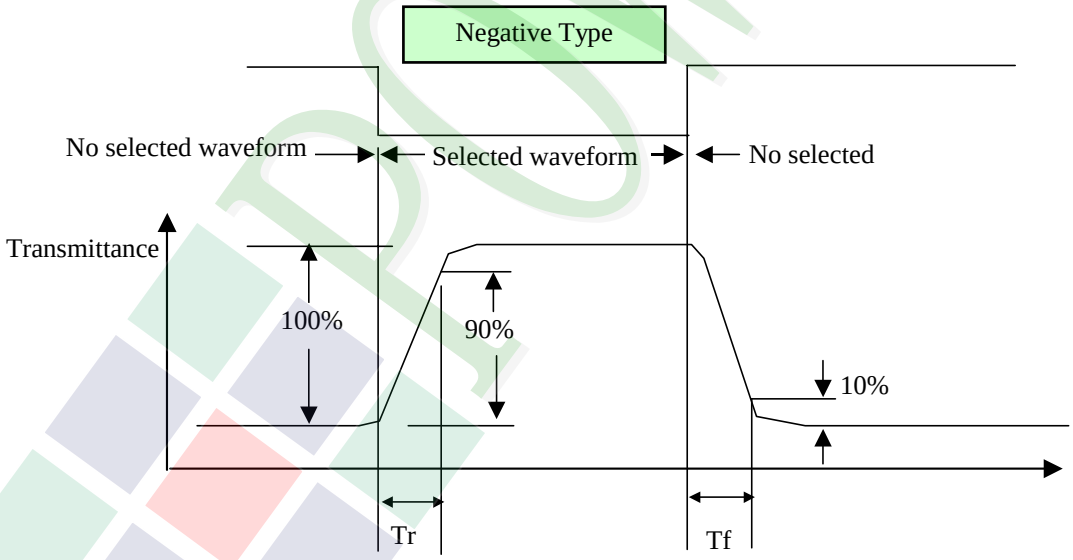

Electrical characteristics-2

※2 Drive waveform

Vop: Drive voltage fF: Frame frequency

1/B: Bias fD: Drive frequency

N: Duty

(1) Selected waveform

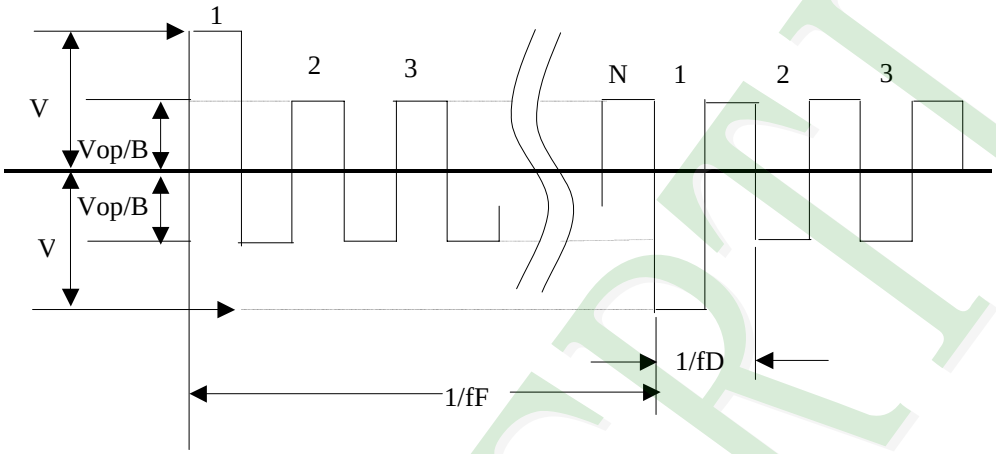

(2) Non- Selected wave form

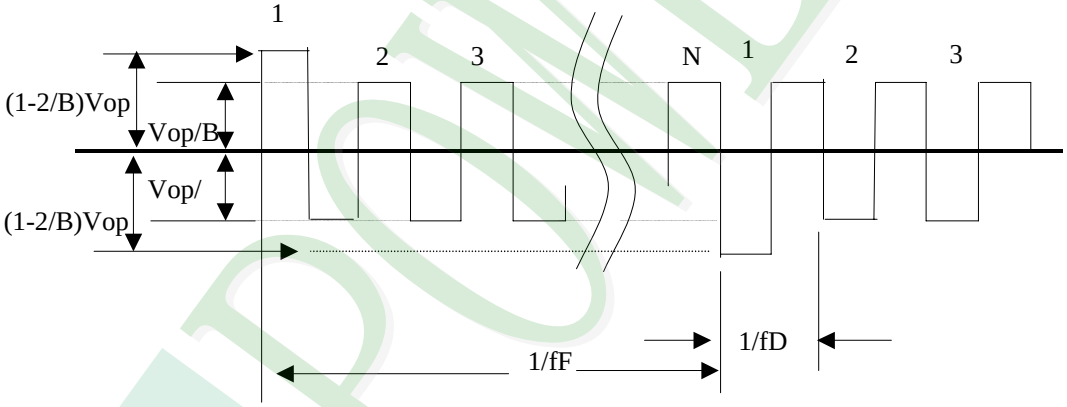

Note:

Frame frequency is defined as follows: Common side supply voltage peak - to - peak /2 = 1 period

Note 3. : Definition of Vth

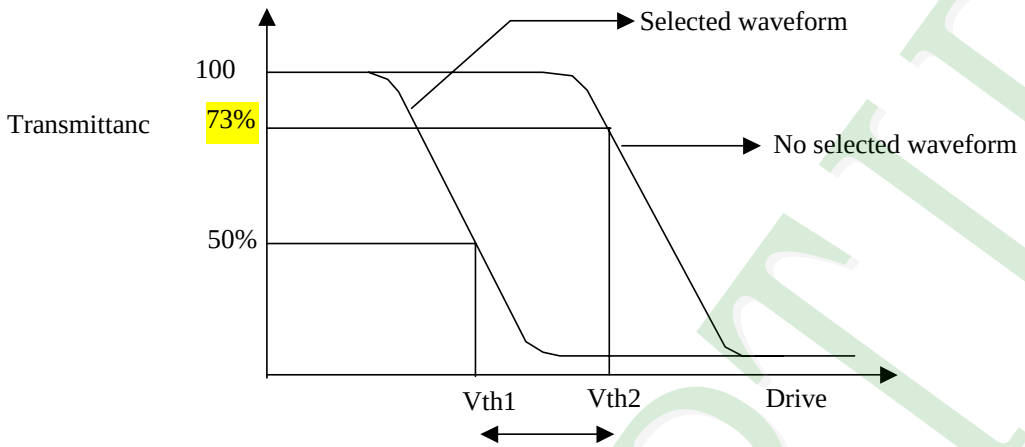

	Vth1	Vth2
View direction	10°	40°
Drive waveform	(Selected waveform)	(No selected waveform)
Transmittance	50%	73%

※1 Contrast ratio
= (Brightness in OFF state) / (Brightness in ON state)

Outline of Electro-Optical Characteristics Measuring System

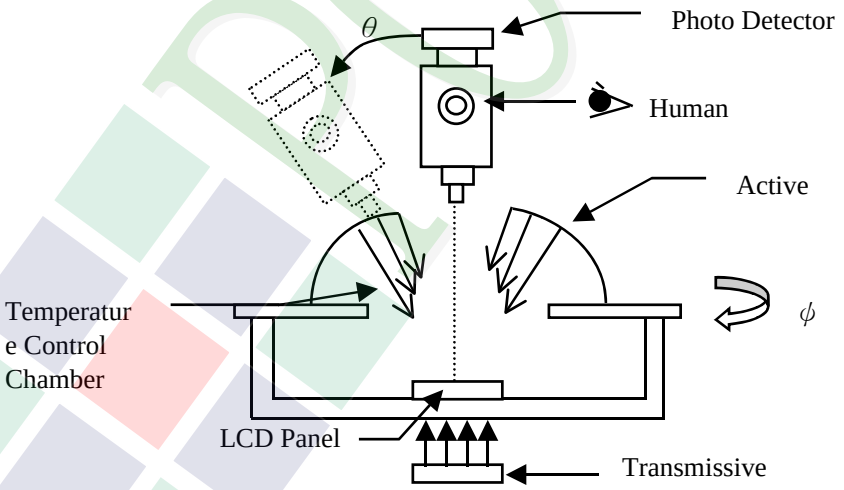

Measuring System: Autronic DMS-803

1.6 Backlight Characteristics

LCD Module with LED Backlight

Maximum Ratings

Item	Symbol	Conditions	Min.	Max.	Unit
Forward Current	IF	Ta =25℃	—	2 x 40	mA
Reverse Voltage	VR	Ta =25℃	—	5	V
Power Dissipation	PD	Ta =25℃	—	2 x 105	mW

Electrical / Optical Characteristics

Item	Symbol	Conditions	Min.	Typ.	Max.	Unit
Forward Voltage	VF	IF=2 x 30 mA	3.1	3.3	3.5	V
CIE Color Coordinate (Without LCD)	X	IF=2 x 30 mA	0.27	0.30	0.33	—
	Y		0.28	0.31	0.34	
Color	White					

Internal Circuit Diagram:

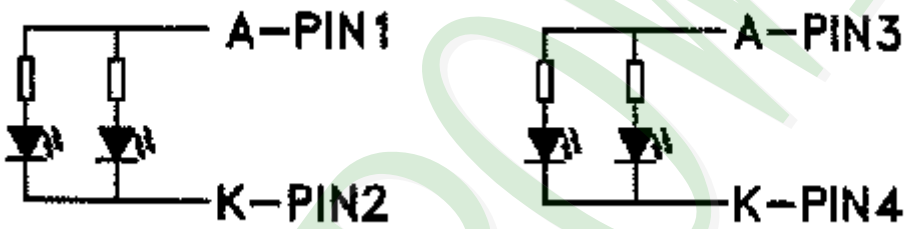

2. MODULE STRUCTURE

2.1 Counter Drawing

2.1.1 LCM Mechanical Diagram

* See Appendix

2.1.2 Block Diagram

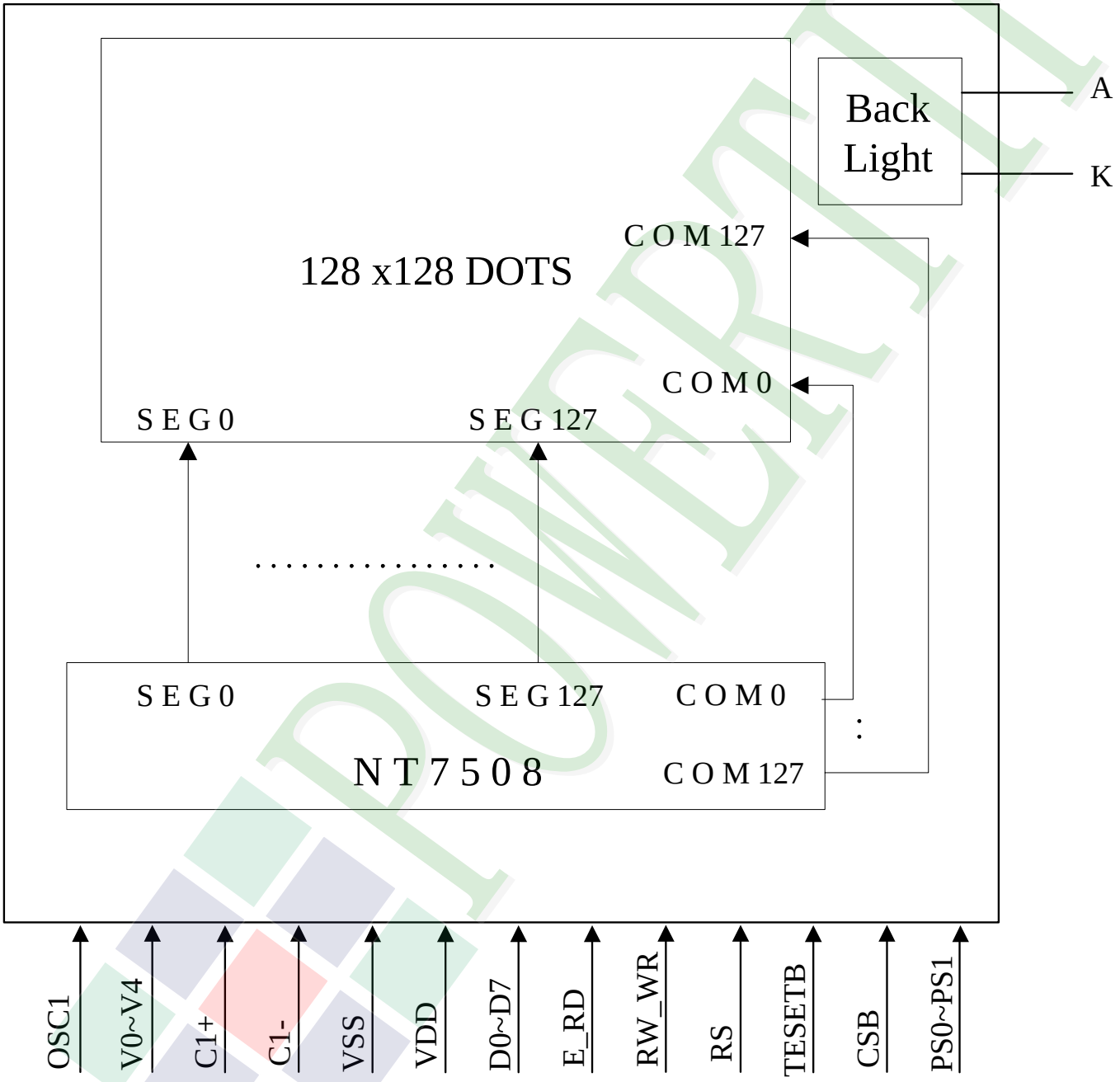

2.1.3 Interface for 8080-series(PS0 =“H”,PS1= “L”)

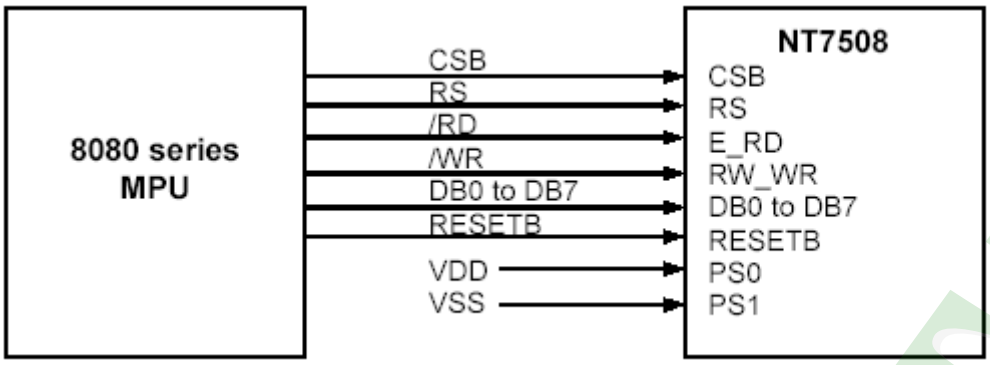

2.1.4 Interface for 6800-series(PS0 =“H”,PS1= “H”)

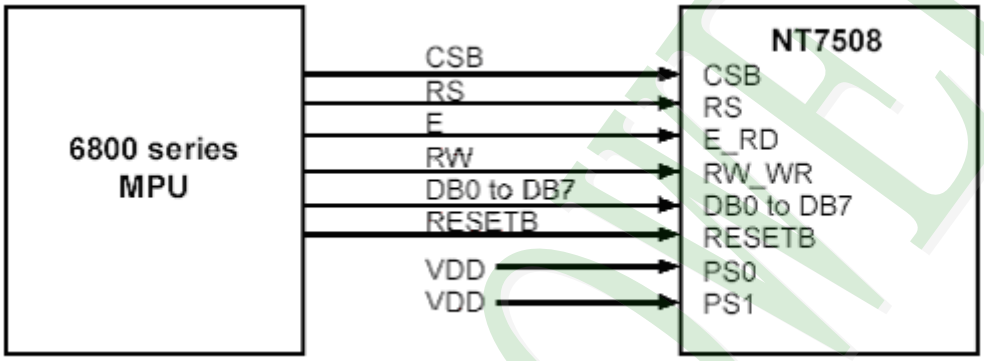

2.2 Interface Pin Description (Please see , 2.4 Reference Power supply circuit)

Pin	Symbol	Description
01	A	LED anode supply
02	K	LED cathode supply
03	A	LED anode supply
04	K	LED cathode supply
05	OSC1	When using internal clock Oscillator, open this pin. When using external clock Oscillator, external OSC input pin.
06	V0	LCD driver supply voltage. Connecting 1uF/ 25V capacitor between this pin and Vss.
07	V1	LCD driver supply voltage. Connecting 1uF/ 25V capacitor between this pin and Vss.
08	V2	LCD driver supply voltage. Connecting 1uF/ 25V capacitor between this pin and Vss.
09	V3	LCD driver supply voltage. Connecting 1uF/ 25V capacitor between this pin and Vss.
10	V4	LCD driver supply voltage. Connecting 1uF/ 25V capacitor between this pin and Vss.
11	NC	No connecting.
12	NC	No connecting.
13	NC	Not used, Must be open.
14	C1+	C1+ connected to C1- with stabilization capacitor. (DC/DC voltage converter) 1.0uF~2.2uF/ (max rating) 6V
15	C1-	
16	NC	Not used, Must be open.
17	NC	Not used, Must be open.
18	VPC1 (VOUT)	This pin is connected to VSS with stabilization capacitor. 1.0uF ~2.2uF / (max rating) 10V
19	VSS	Ground
20	VDD	Power supply
21	DB7	Data Bus
22	DB6	Data Bus
23	DB5	Data Bus
24	DB4	Data Bus
25	DB3	Data Bus
26	DB2	Data Bus

<table>
<tr><td>27</td><td>DB1</td><td>Data Bus</td></tr>
<tr><td>28</td><td>DB0</td><td>Data Bus</td></tr>
<tr><td>29</td><td>E_RD</td><td>Read / Write execution control pin
<table>
<tr><th>PS1</th><th>MPU Type</th><th>E_RD</th><th>Description</th></tr>
<tr><td>H</td><td>6800 series</td><td>E</td><td>Read / Write control input pin
-RW=”H” : When E is “H”,DB0 to DB7 are in an output status.
-RW=”L” : The data on DB0 to DB7 are latched at the falling edge of the E signal</td></tr>
<tr><td>L</td><td>8080 series</td><td>/ RD</td><td>Read enable clock input pin
When /RD is “L”,DB0 to DB7 are in an output status.</td></tr>
</table>
.</td></tr>
<tr><td>30</td><td>RW_WR</td><td>Read / Write execution control pin
<table>
<tr><th>PS1</th><th>MPU Type</th><th>RW_WR</th><th>Description</th></tr>
<tr><td>H</td><td>6800 series</td><td>RW</td><td>Read / Write control input pin
-RW=”H” : read
-RW=”L” : write</td></tr>
<tr><td>L</td><td>8080 series</td><td>/ WR</td><td>Write enable clock input pin
The data on DB0 to DB7 are latched at the rising edge of the /WR signal.</td></tr>
</table>
.</td></tr>
<tr><td>31</td><td>RS</td><td>Register select input pin
”H” : DB[7:0] are display data.
”L” : DB[7:0] are control data.</td></tr>
<tr><td>32</td><td>RESETB</td><td>Hardware reset pin</td></tr>
<tr><td>33</td><td>CSB</td><td>Chip select input pin
”H” : DB[7:0] are control data.
”L” : Data/Instruction I/O is enable.</td></tr>
<tr><td>34</td><td>PS1</td><td>Interface select input pin.
”H” : 6800 series.
”L” : 8080 series.</td></tr>
<tr><td>35</td><td>PS0</td><td>Data select input pin.
”H” : Parallel ; ”L” : Serial.</td></tr>
</table>

2.3 Timing Characteristics

2.3.1 Write Timing

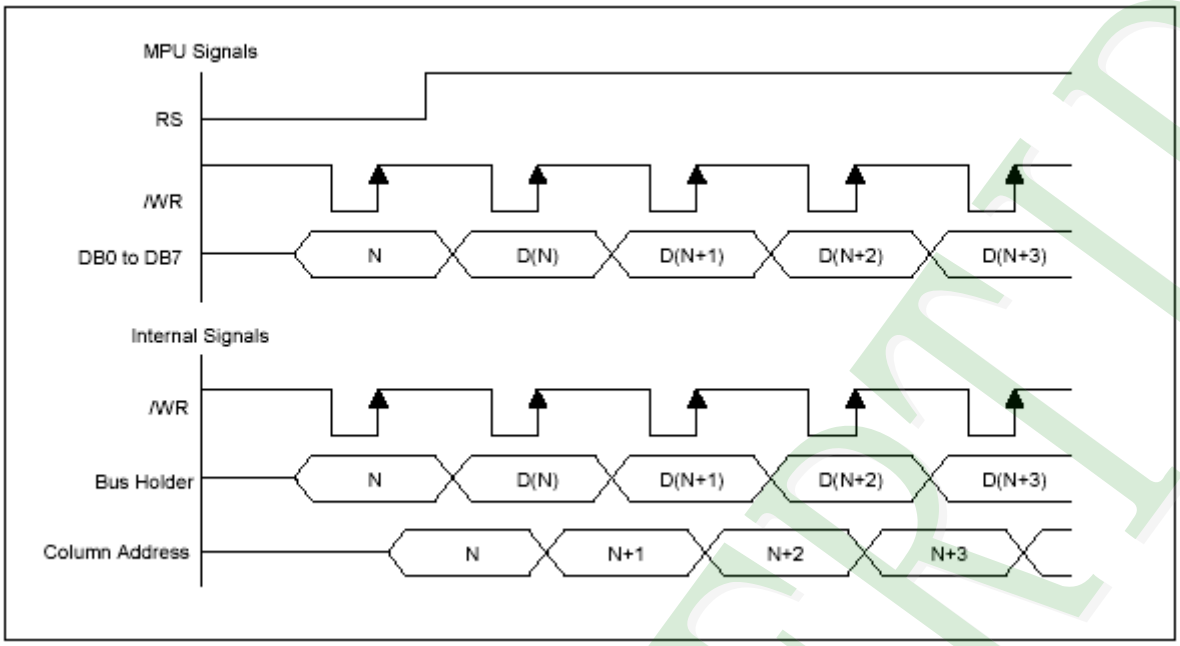

2.3.2 Read Timing

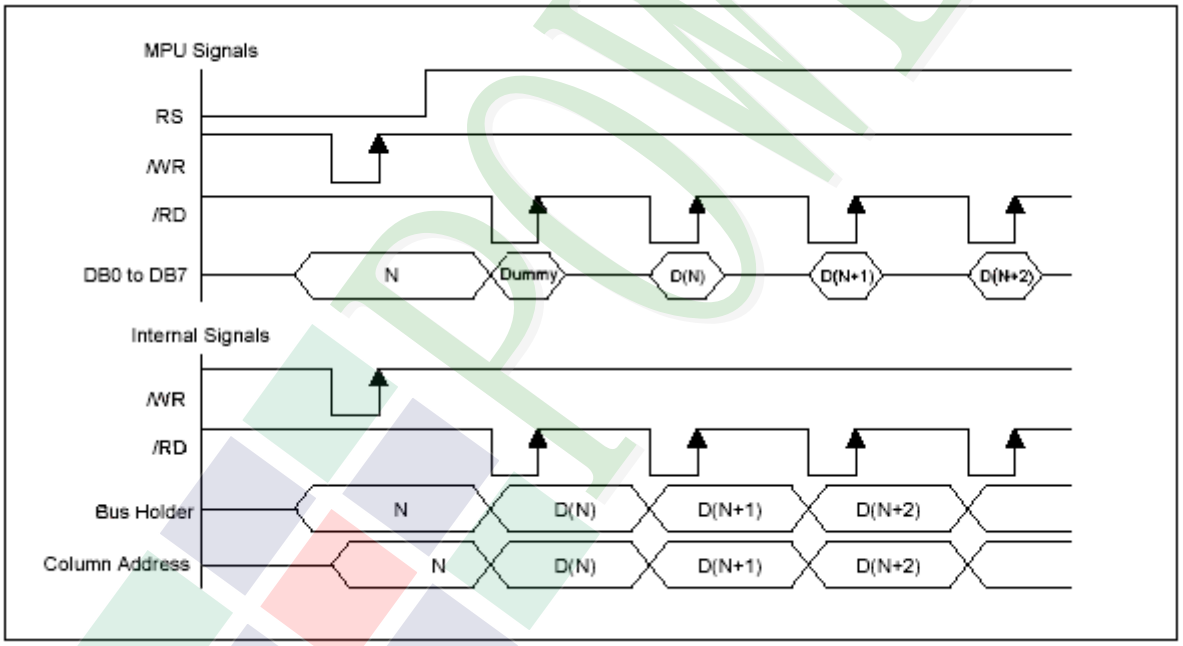

2.4 Reference Power supply circuit

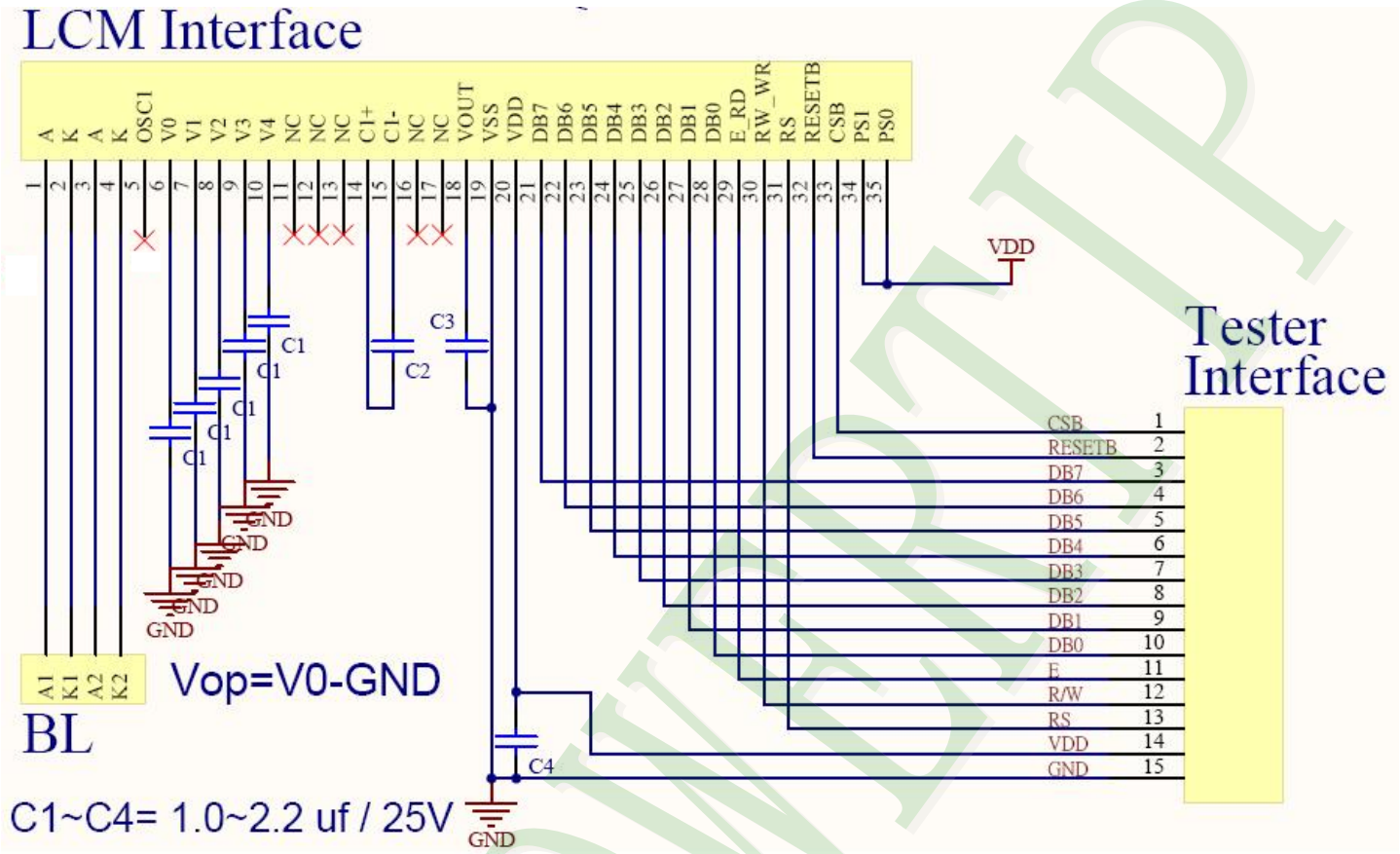

3. QUALITY ASSURANCE SYSTEM

3.1 Quality Assurance Flow Chart

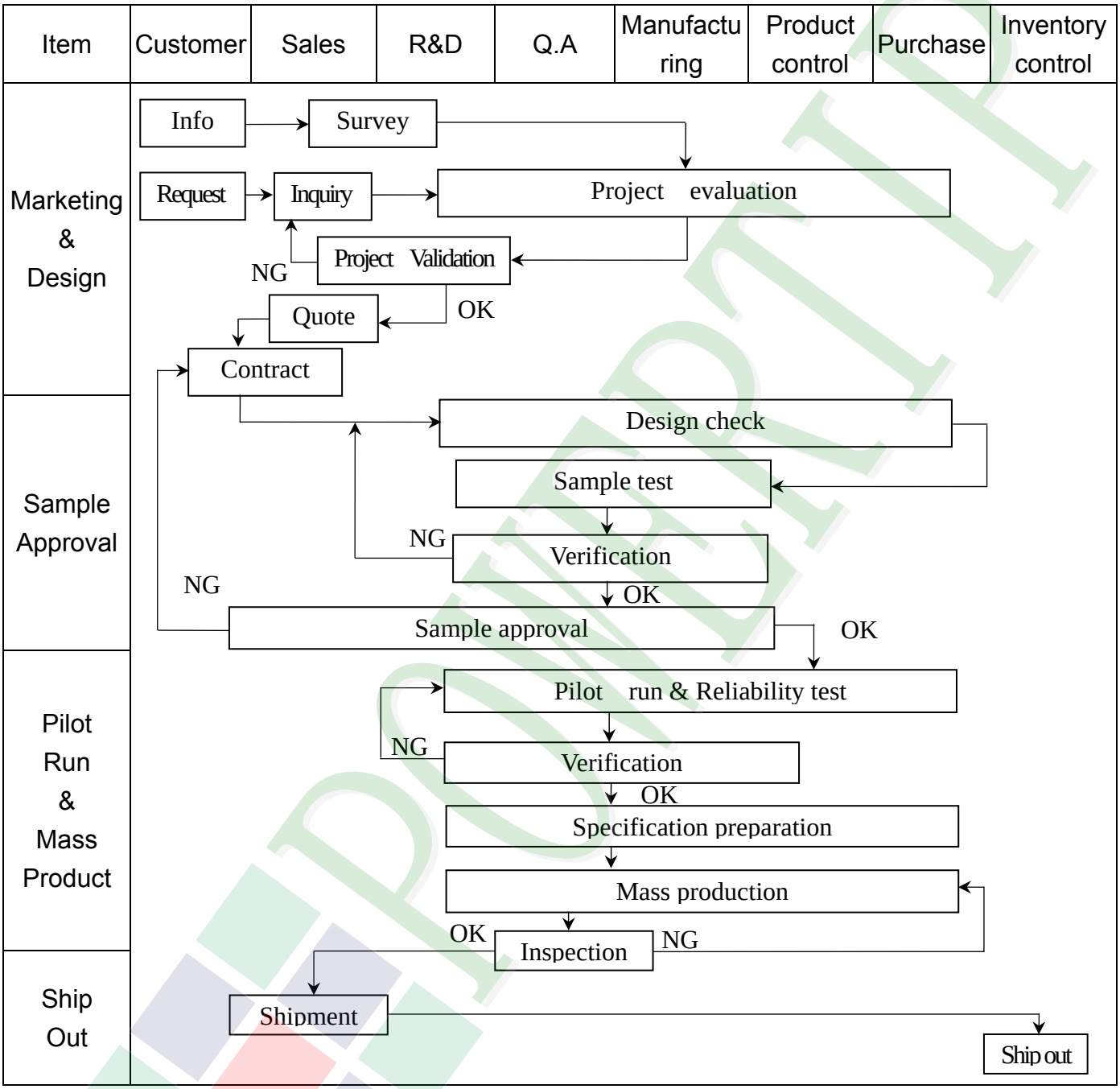

Item	Customer	Sales	R&D	Q.A	Manufacturing	Product control	Purchase	Inventory control
Sales Service	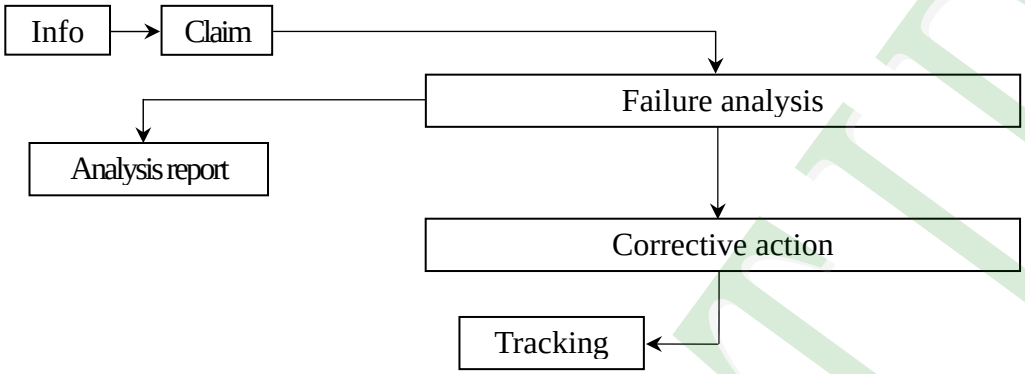							
Q.A Activity	1. ISO 9001 Maintenance Activities 2. Process improvement proposal 3. Equipment calibration 4. Education And Training Activities 5. Standardization Management							

3.2 Inspection Specification

◆Scope : The document shall be applied to LCD Module for Monotype and Color STN (Ver. 03).

◆Inspection Standard : MIL-STD-105E Table Normal Inspection Single Sampling Level Ⅱ .

◆Equipment : Gauge、MIL-STD、Powertip Tester、Sample

◆Defect Level : Major Defect AQL：0.4 ; Minor Defect：AQL： 1.5 .

◆OUT Going Defect Level : Sampling .

◆Manner of appearance test :

(1). The test be under 20W×2 fluorescent light ' and distance of view must be at 30 cm.

(2). Standard of inspection： (Unit：mm)

(3). The test direction is base on about around 45° of vertical line. (Fig. 1)

(4). Definition of area . (Fig. 2)

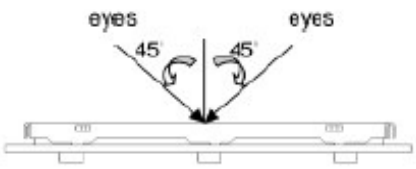

Fig.1

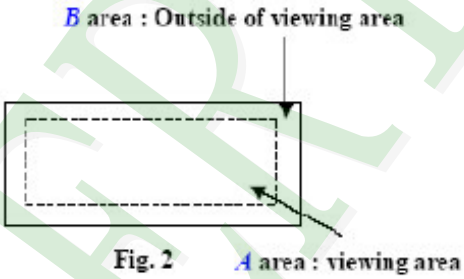

Fig. 2

◆ Specification:

NO	Item	Criterion	level
01	Product condition	1.1 The part number is inconsistent with work order of Production.	Major
		1.2 Mixed production types.	Major
		1.3 Assembled in inverse direction.	Major
02	Quantity	2.1 The quantity is inconsistent with work order of production.	Major
03	Outline dimension	3.1 Product dimension and structure must conform to Structure diagram.	Major
04	Electrical Testing	4.1 Missing line character and icon.	Major
		4.2 No function or no display.	Major
		4.3 Output data is error.	Major
		4.4 LCD viewing angle defect.	Major
		4.5 Current consumption exceeds product specifications.	Major

◆Specification For Monotype and Color STN：

(Ver. 03)

NO	Item	Criterion	level
05	Black or white dot、scratch、contamination Round type 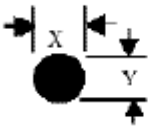 Φ=(x+y)/2 Line type 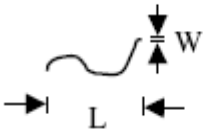	5.1 Round type: 5.1.1 display only : • White and black spots on display ≦ 0.30 mm , no more than 4 white or black spots present. • Densely spaced : NO more than two spots or lines within 3 mm. 5.1.2 Non-display : Dimension (diameter : Φ) / Acceptance (Q'ty): A area / B area Φ ≦ 0.10 — Accept no dense / Ignore 0.10 < Φ ≦ 0.20 — 3 / Ignore 0.20 < Φ ≦ 0.30 — 2 / Ignore Total quantity — 4 / Ignore 5.1.3 Line type: Dimension: Length (L), Width (W) / Acceptance (Q'ty): A area, B area --- , W ≦ 0.03 — Accept no dense / Ignore L ≦ 3.0 , 0.03 < W ≦ 0.05 — 4 / Ignore L ≦ 2.5 , 0.05 < W ≦ 0.075 — 4 / Ignore --- , W > 0.075 — As round type	Minor
06	Polarizer Bubble	Dimension (diameter : Φ) / Acceptance (Q'ty): A area / B area Φ ≦ 0.20 — Accept no dense / Ignore 0.20 < Φ ≦ 0.50 — 3 / Ignore 0.50 < Φ ≦ 1.00 — 2 / Ignore Φ > 1.00 — 0 / Ignore Total quantity — 4 / Ignore	Minor

◆Specification For Monotype and Color STN：

(Ver. 03)

NO	Item	Criterion	Level
07	The crack of glass	Symbols： X : The length of crack　　Y : The width of crack. Z : The thickness of crack　　W : terminal length t : The thickness of glass　　a : LCD side length 7.1 General glass chip： 7.1.1 Chip on panel surface and crack between panels: 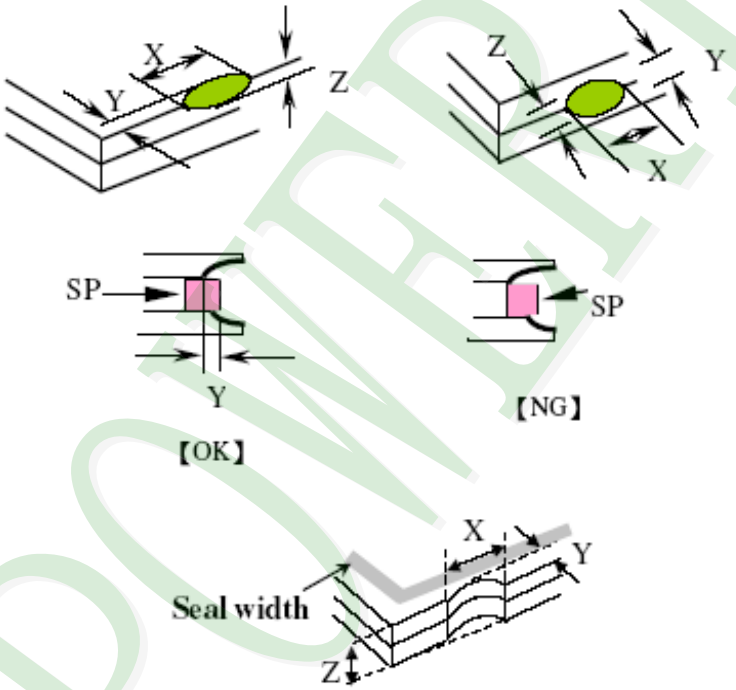 	Minor

X	Y	Z
≦ a	Crack can't enter viewing area	≦1/2 t
≦ a	Crack can't exceed the half of SP width.	1/2 t < Z ≦2 t

◆Specification For Monotype and Color STN：

(Ver. 03)

NO	Item	Criterion	Level
07	The crack of glass	Symbols： X : The length of crack　　Y : The width of crack. Z : The thickness of crack　　W : terminal length t : The thickness of glass　　a : LCD side length 7.1.2 Corner crack：	Minor

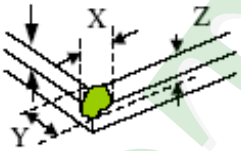

X	Y	Z
≦1/5 a	Crack can't enter viewing area	Z ≦ 1/2 t
≦1/5 a	Crack can't exceed the half of SP width.	1/2 t < Z ≦ 2 t

7.2 Protrusion over terminal：

7.2.1 Chip on electrode pad：

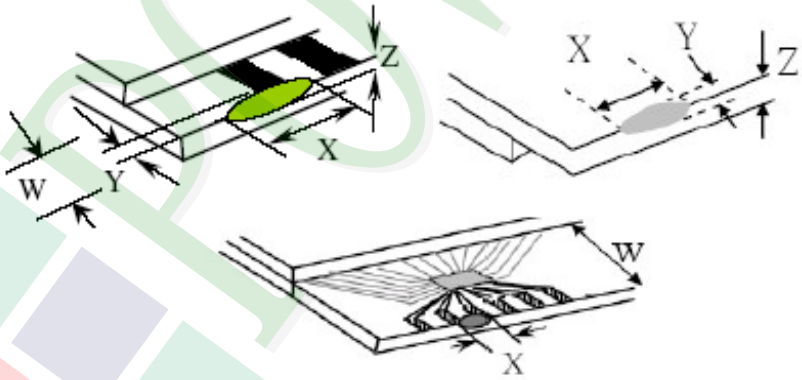

	X	Y	Z
Front	≦ a	≦ 1/2 W	≦ t
Back	Neglect		

◆Specification For Monotype and Color STN：

(Ver. 03)

NO	Item	Criterion	Level
07	The crack of glass	Symbols： X : The length of crack　　Y : The width of crack. Z : The thickness of crack　　W : terminal length t : The thickness of glass　　a : LCD side length 7.2.2 Non-conductive portion： 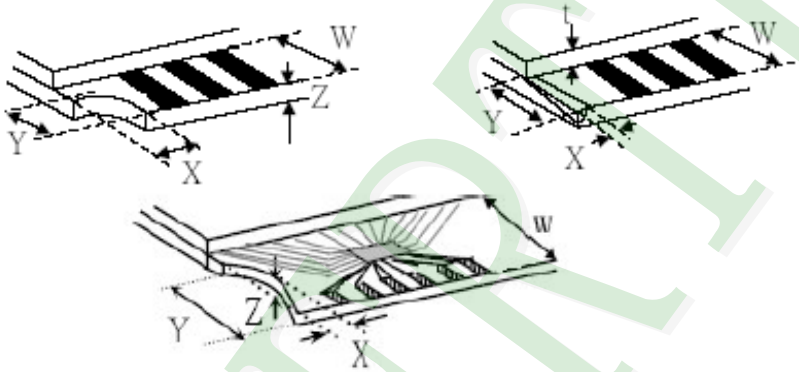 X : ≦1/3 a　Y : ≦W　Z : ≦t ⊙ If the chipped area touches the ITO terminal, over 2/3 of the ITO must remain and be inspected according to electrode terminal specifications. 7.2.3 Glass remain： 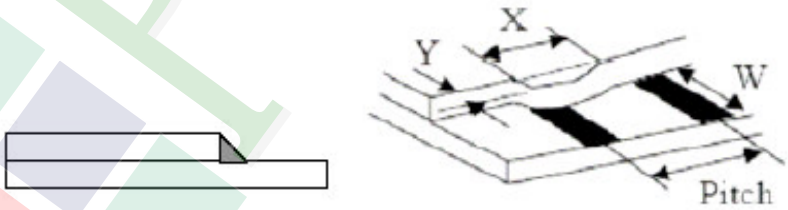 X : ≦ a　Y : ≦ 1/3 W　Z : ≦ t	Minor

◆Specification For Monotype and Color STN：

(Ver. 03)

NO	Item	Criterion	Level
08	Backlight elements	8. 1 Backlight can't work normally.	Major
		8. 2 Backlight doesn't light or color is wrong.	Major
		8. 3 Illumination source flickers when lit.	Major
09	General appearance	9. 1 Pin type must match type in specification sheet.	Major
		9. 2 No short circuits in components on PCB or FPC.	Major
		9. 3 Product packaging must the same as specified on packaging specification sheet.	Minor
		9. 4 The folding and peeled off in polarizer are not acceptable.	Minor
		9. 5 The PCB or FPC between B/L assembled distance (PCB or FPC) is ≦1. 5 mm.	Minor

4. RELIABILITY TEST

4.1 Reliability Test Condition

NO.	TEST ITEM	TEST CONDITION
1	High Temperature Storage Test	Keep in +80 ±2℃ 96 hrs Surrounding temperature, then storage at normal condition 4hrs.
2	Low Temperature Storage Test	Keep in -30 ±2℃ 96 hrs Surrounding temperature, then storage at normal condition 4hrs.
3	High Temperature / High Humidity Storage Test	Keep in +60℃ / 90% R.H duration for 96 hrs Surrounding temperature, then storage at normal condition 4hrs. (Excluding the polarizer)
4	ESD Test	Air Discharge: Apply 2 KV with 5 times Discharge for each polarity +/- Contact Discharge: Apply 250 V with 5 times discharge for each polarity +/- 1. Temperature ambiance : 15℃～35℃ 2. Humidity relative : 30%～60% 3. Energy Storage Capacitance(Cs+Cd) : 150pF±10% 4. Discharge Resistance(Rd) : 330Ω±10% 5. Discharge, mode of operation : Single Discharge (time between successive discharges at least 1 sec) (Tolerance if the output voltage indication : ±5%)
5	Temperature Cycling Storage Test	-20℃ → +25℃ → +70℃ → +25℃ (30mins) (5mins) (30mins) (5mins) 10 Cycle Surrounding temperature, then storage at normal condition 4hrs.
6	Vibration Test (Packaged)	1. Sine wave 10 55 Hz frequency (1 min) 2. The amplitude of vibration :1.5 mm 3. Each direction (X、Y、Z) duration for 2 Hrs
7	Drop Test (Packaged)	Packing Weight (Kg) / Drop Height (cm) 0 ~ 45.4 / 122 45.4 ~ 90.8 / 76 90.8 ~ 454 / 61 Over 454 / 46 Drop direction :※1 corner / 3 edges / 6 sides each 1times

5. PRECAUTION RELATING PRODUCT HANDLING

5.1 SAFETY

5.1.1 If the LCD panel breaks, be careful not to get the liquid crystal to touch your skin.

5.1.2 If the liquid crystal touches your skin or clothes, please wash it off immediately by using soap and water.

5.2 HANDLING

5.2.1 Avoid any strong mechanical shock which can break the glass.

5.2.2 Avoid static electricity which can damage the CMOS LSI—When working with the module , be sure to ground your body and any electrical equipment you may be using.

5.2.3 Do not remove the panel or frame from the module.

5.2.4 The polarizing plate of the display is very fragile. So, please handle it very carefully, do not touch , push or rub the exposed polarizing with anything harder than an HB pencil lead (glass , tweezers , etc.)

5.2.5 Do not wipe the polarizing plate with a dry cloth, as it may easily scratch the surface of plate.

5.2.6 Do not touch the display area with bare hands, this will stain the display area.

5.2.7 Do not use ketonics solvent & aromatic solvent. Use with a soft cloth soaked with a cleaning naphtha solvent.

5.2.8 To control temperature and time of soldering is 320 ± 10°C and 3-5 sec.

5.2.9 To avoid liquid (include organic solvent) stained on LCM

5.3 STORAGE

5.3.1 Store the panel or module in a dark place where the temperature is 25°C ± 5°C and the humidity is below 65% RH.

5.3.2 Do not place the module near organics solvents or corrosive gases.

5.3.3 Do not crush, shake, or jolt the module.

5.4 TERMS OF WARRANTY

5.4.1 Applicable warrant period

The period is within thirteen months since the date of shipping out under normal using and storage conditions.

5.4.2 Unaccepted responsibility

This product has been manufactured to your company's specification as a part for use in your company's general electronic products. It is guaranteed to perform according to delivery specifications. For any other use apart from general electronic equipment, we cannot take responsibility if the product is used in nuclear power control equipment, aerospace equipment , fire and security systems or any other applications in which there is a direct risk to human life and where extremely high levels of reliability are required.

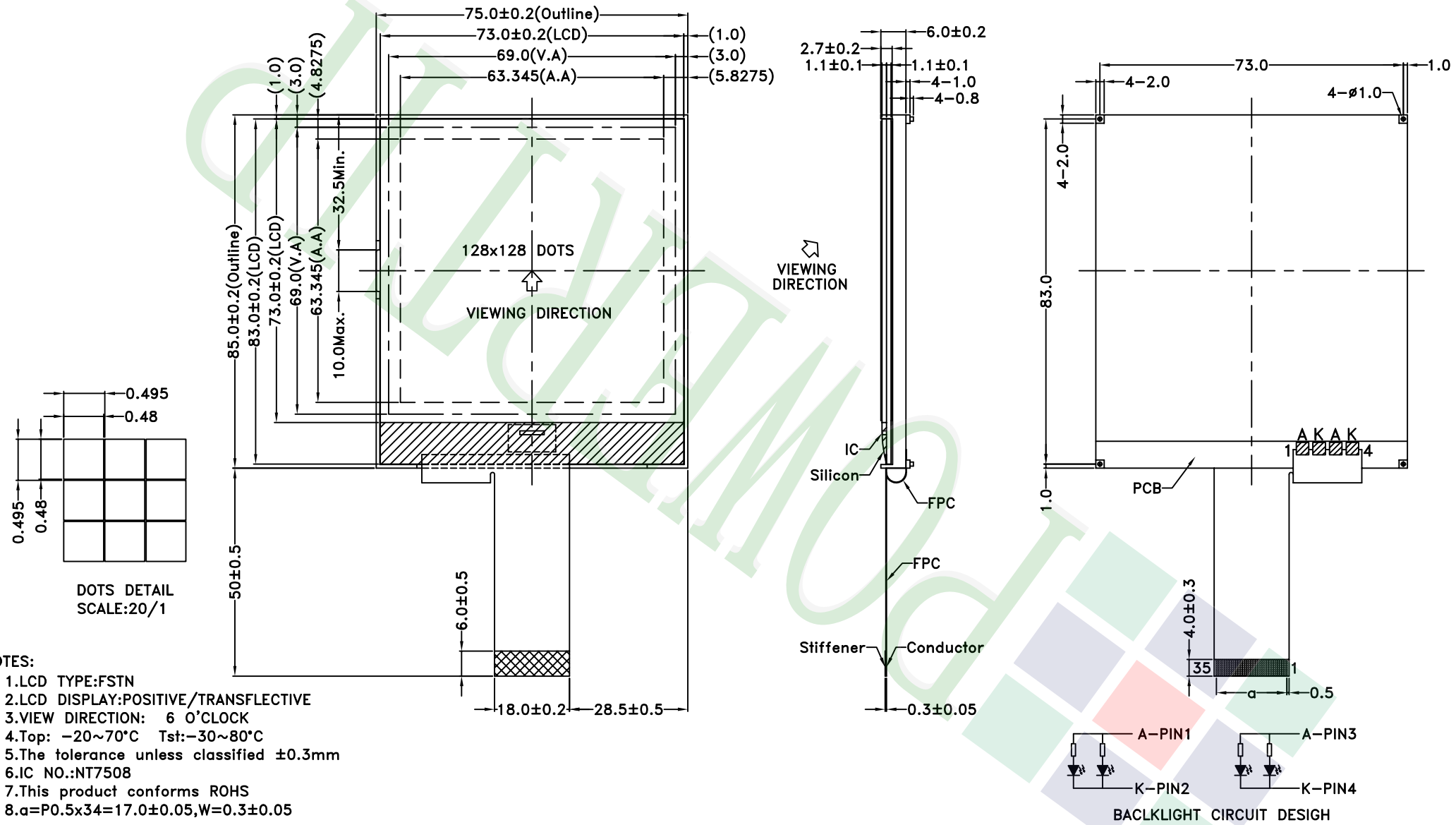

NOTES:

1. LCD TYPE:FSTN
2. LCD DISPLAY:POSITIVE/TRANSFLECTIVE
3. VIEW DIRECTION: 6 O'CLOCK
4. Top: −20~70°C Tst:−30~80°C
5. The tolerance unless classified ±0.3mm
6. IC NO.:NT7508
7. This product conforms ROHS
8. a=P0.5x34=17.0±0.05,W=0.3±0.05

REV	REV BY	REVISER	DATE
007			
006			
005			
004			
003			
002			
001	NEW DRAWING	Jupei	2008/02/21

PART NO: PE128128WRF-005-HQ

DRAWING NAME : LMD-PE128128WRF-005-HQ

TITLE: LCD Module Drawing

久正光電股份有限公司
POWERTIP TECHNOLOGY CORPORATION

Design	Jupei	(3)	Surface
Check	Stone	Unit	MM
Approve	Oliver	Scale	1:1
		Page	1/1
		Material	
		Thickness	
		Quantity	

最小長度 (mm) \ 公差精度等級	精級
1 ~ 4	-
4 ~ 16	-
16 ~ 63	-
63 ~ 250	-
250 ~ 1000	-

Ver.002	
Documents NO.	PKG-PE128128WRF-005-HQ

LCM包裝規格書
LCM Packaging Specifications

Approve	Check	Contact
Linda	Stone	Mag

1.包裝材料規格表 (Packaging Material) : (per carton)

No.	Item	Model	Dimensions (mm)	1Pcs Weight	Quantity	Total Weight
1	成品 (LCM)	PE128128WRF-005-HQ	75.0 X 85.0	0.06	180	10.8
2	靜電袋(1)Antistatic Bag	BAG150120ARABA	150 X 120	0.0018	180	0.324
3	A2隔板(2)A2 Partition	BX29300070BMBA	293 X 70 X 2.5	0.011	66	0.726
4	B2隔板(3)B2 Partition	BX24500070BLBA	245 X 70 X 2.5	0.01	24	0.24
5	海綿墊(4)Foam Rubber Cushion	OTFOAM00006ABA	290 X 240 X 10	0.02	6	0.12
6	氣泡紙(5)Bubble Sheet	BAG280240BWABA	280 X 240	0.006	6	0.036
7	C3內盒(6)Product Box	BX31025510AABA	310 X 255 X 100	0.263	6	1.578
8	外紙箱(7)Carton	BX52732536CCBA	527 X 325 X 360	1.092	1	1.092
9						

2.一 整箱總重量 (Total LCD Weight in carton) : 14.92 Kg±10%

3.單箱數量規格表 (Packaging Specifications and Quantity) :

(1)Quantity Of Spacer : A2隔板 X 11 , B2隔板 X 4

(2)Total LCM quantity in carton : quantity per box 30 x no of boxes 6 = 180

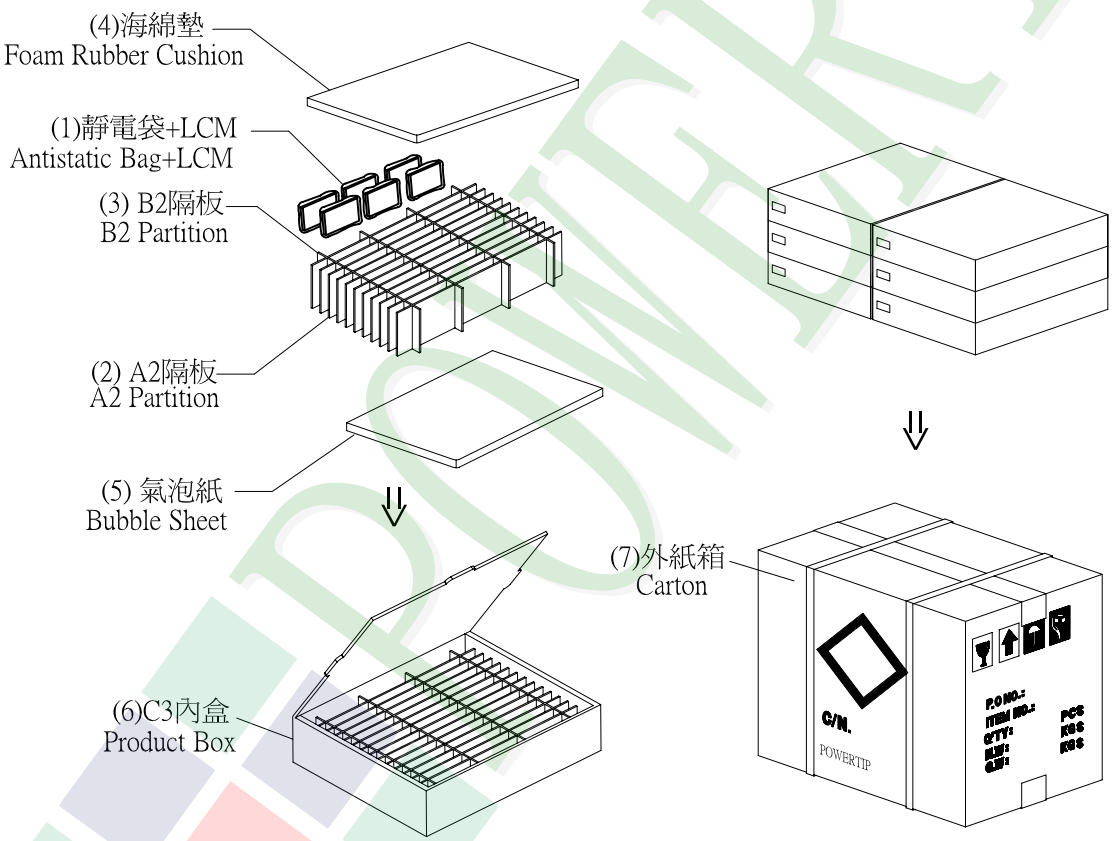

特 記 事 項 (REMARK)

1. Label Specifications :

MODEL:
LOT NO:
QUANTITY:
CHECK:

2. 每個間隔放2片模組，前後間隔不放置模組。(如放置格示意圖)

2. 2LCM are placed on every other slot of the divider.
Note: First and last slot should be empty.
(See remarks 3 on packaging specifications)

3.放置格示意圖:
3.Each divider is placed inside a product Box

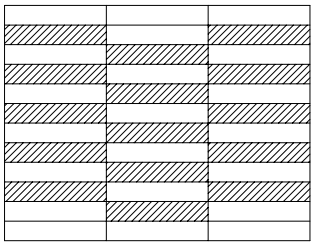

1. ▨ 模組x2PCS(LCM)
2. □ 空格(Blank Space)